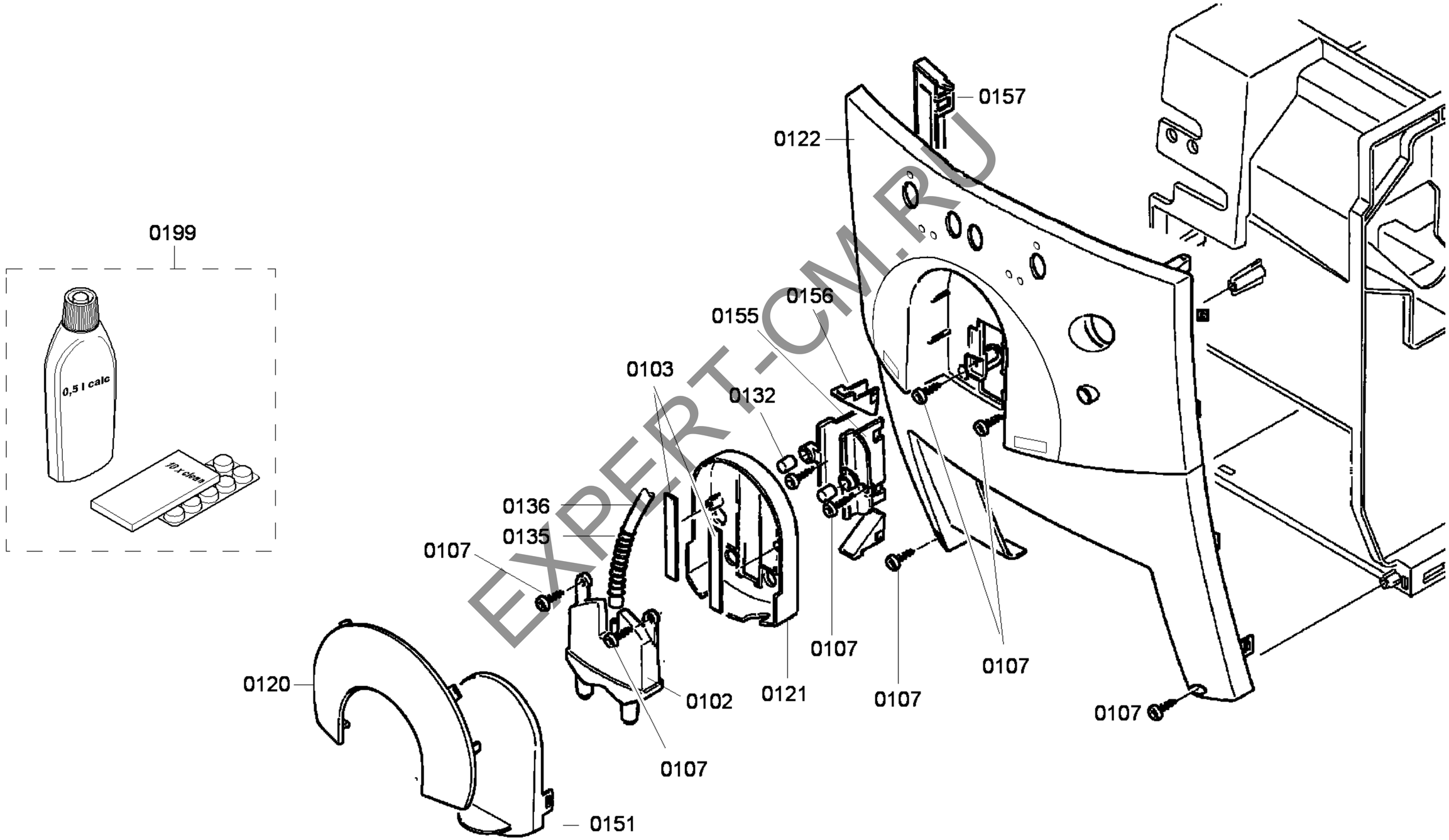

EXPERT-CM.RU

Copyright © (2011) by Bosch / SERRU_200100481_1

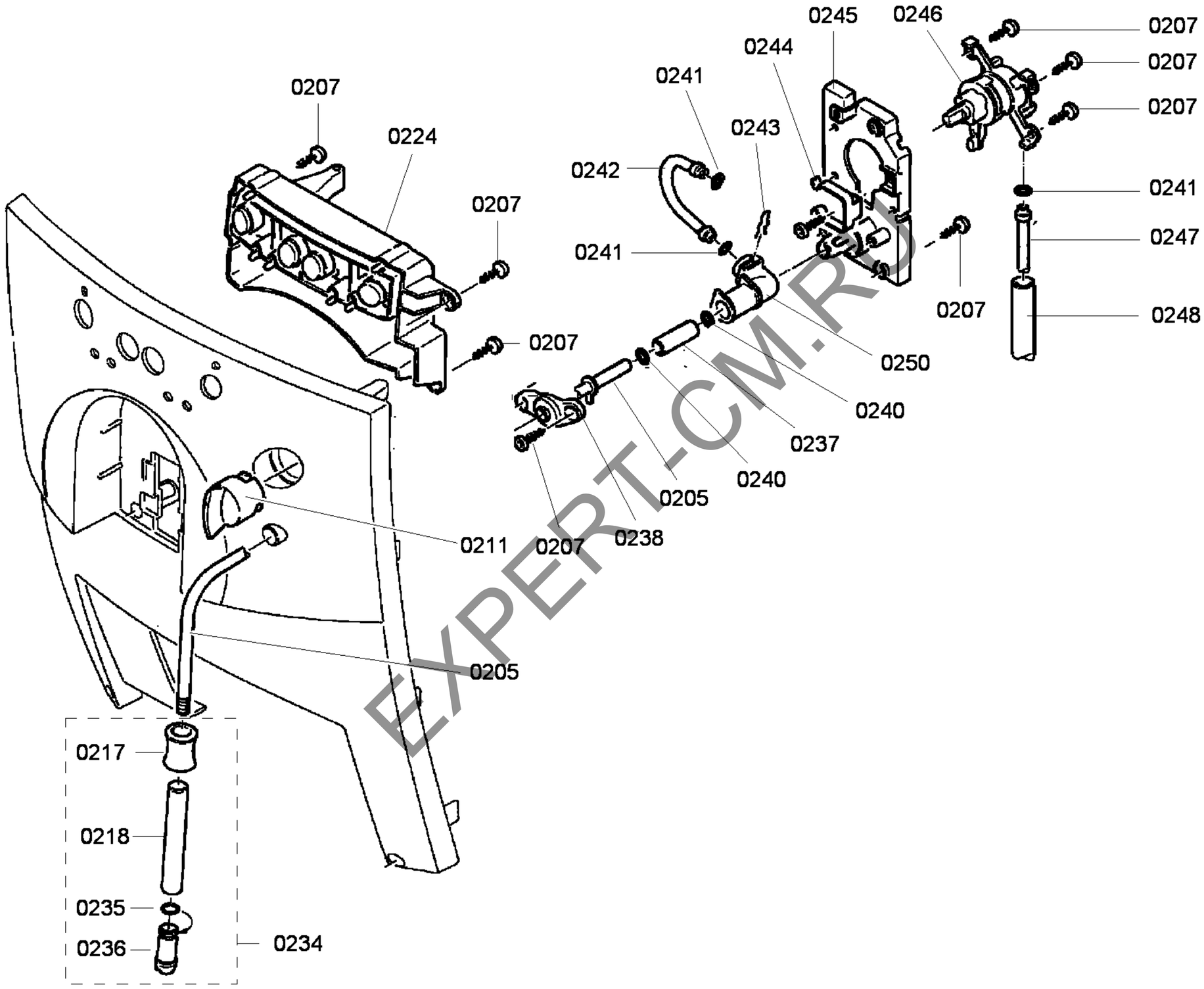

EXPERT-CM.RU

Copyright © (2011) by Bosch / SERRU_200100481_1

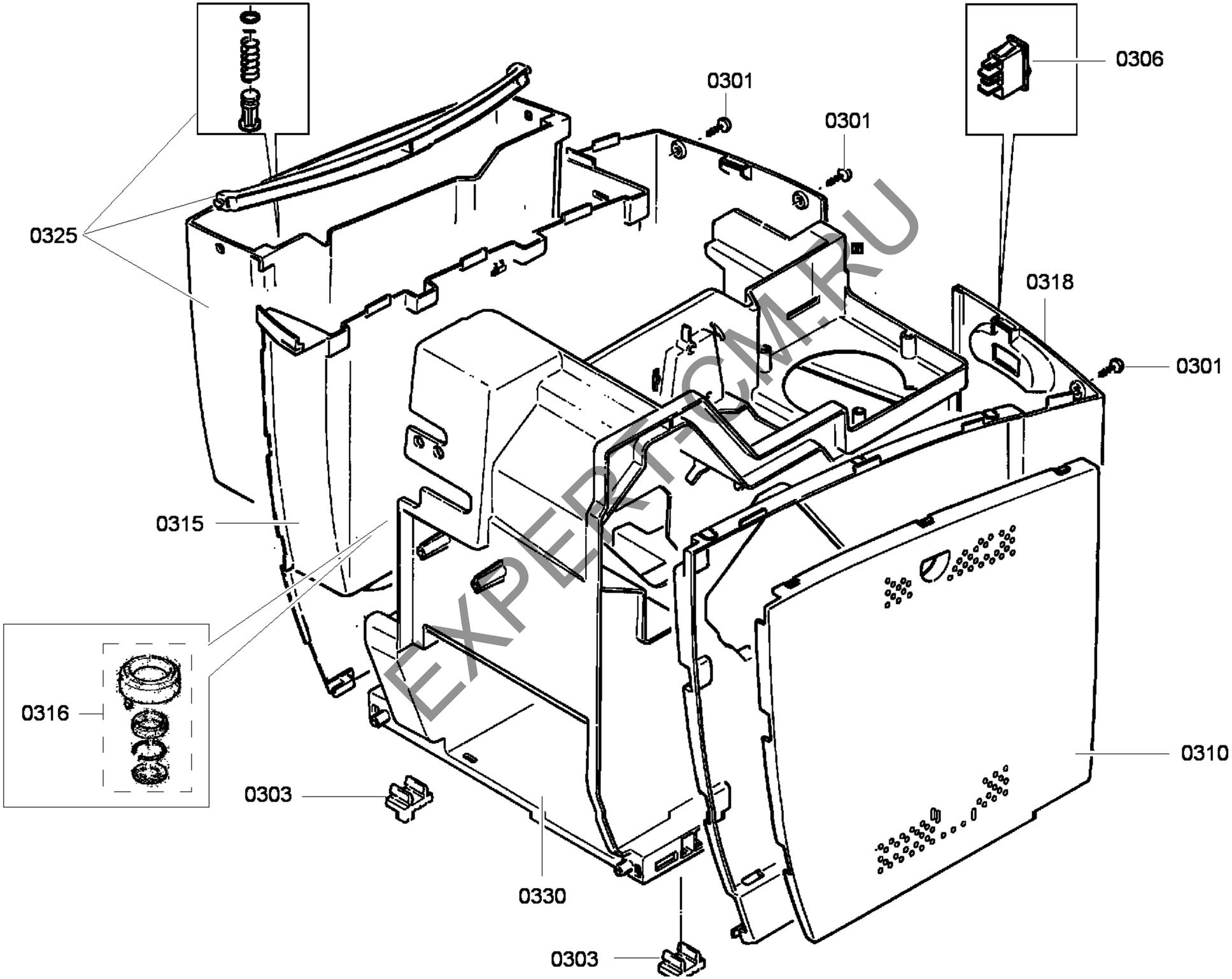

EXPERT-CM.RU

Copyright © (2011) by Bosch / SERRU_200100481_1

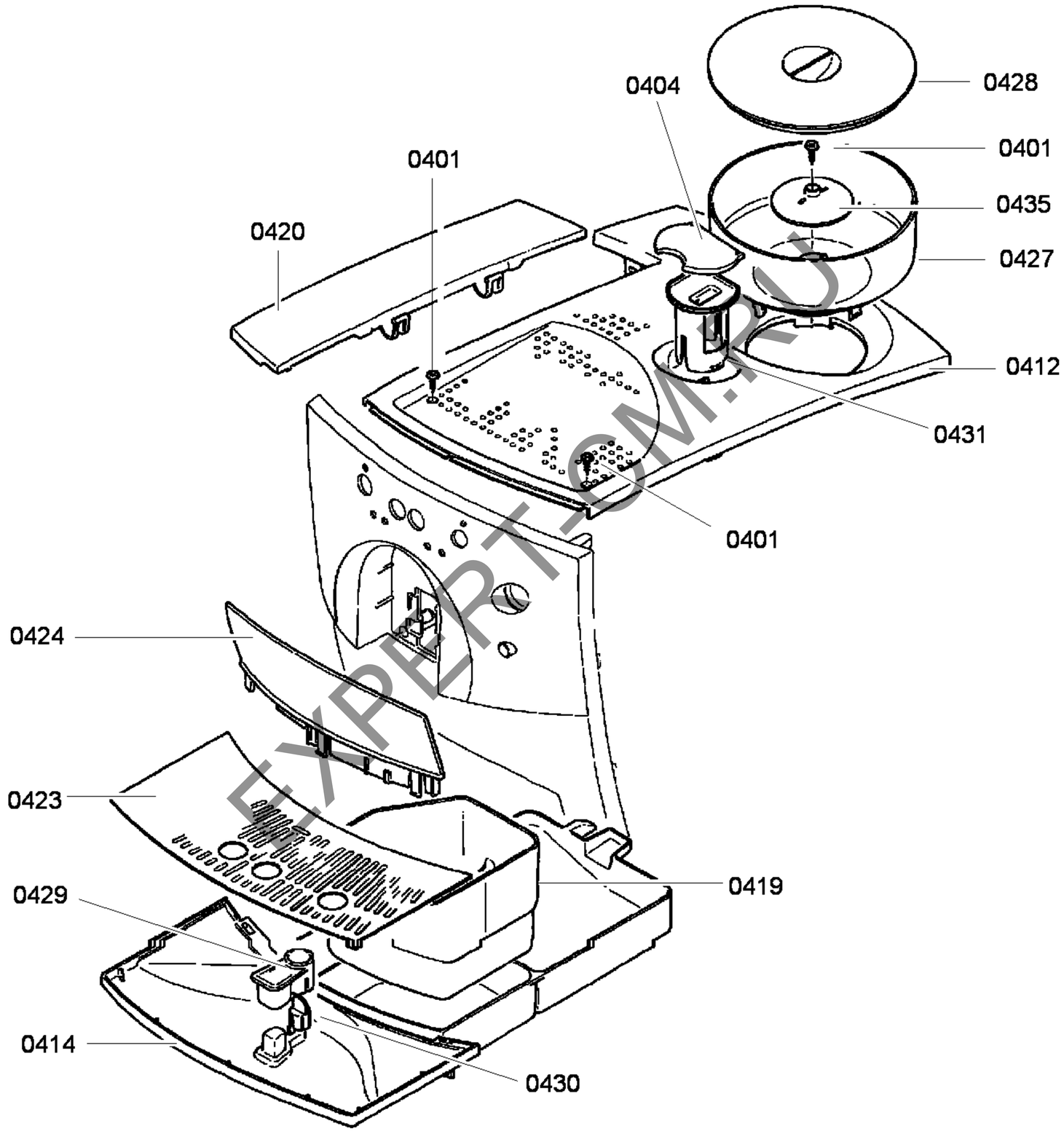

EXPERT-SM.RU

Copyright © (2011) by Bosch / SERRU_200100481_1

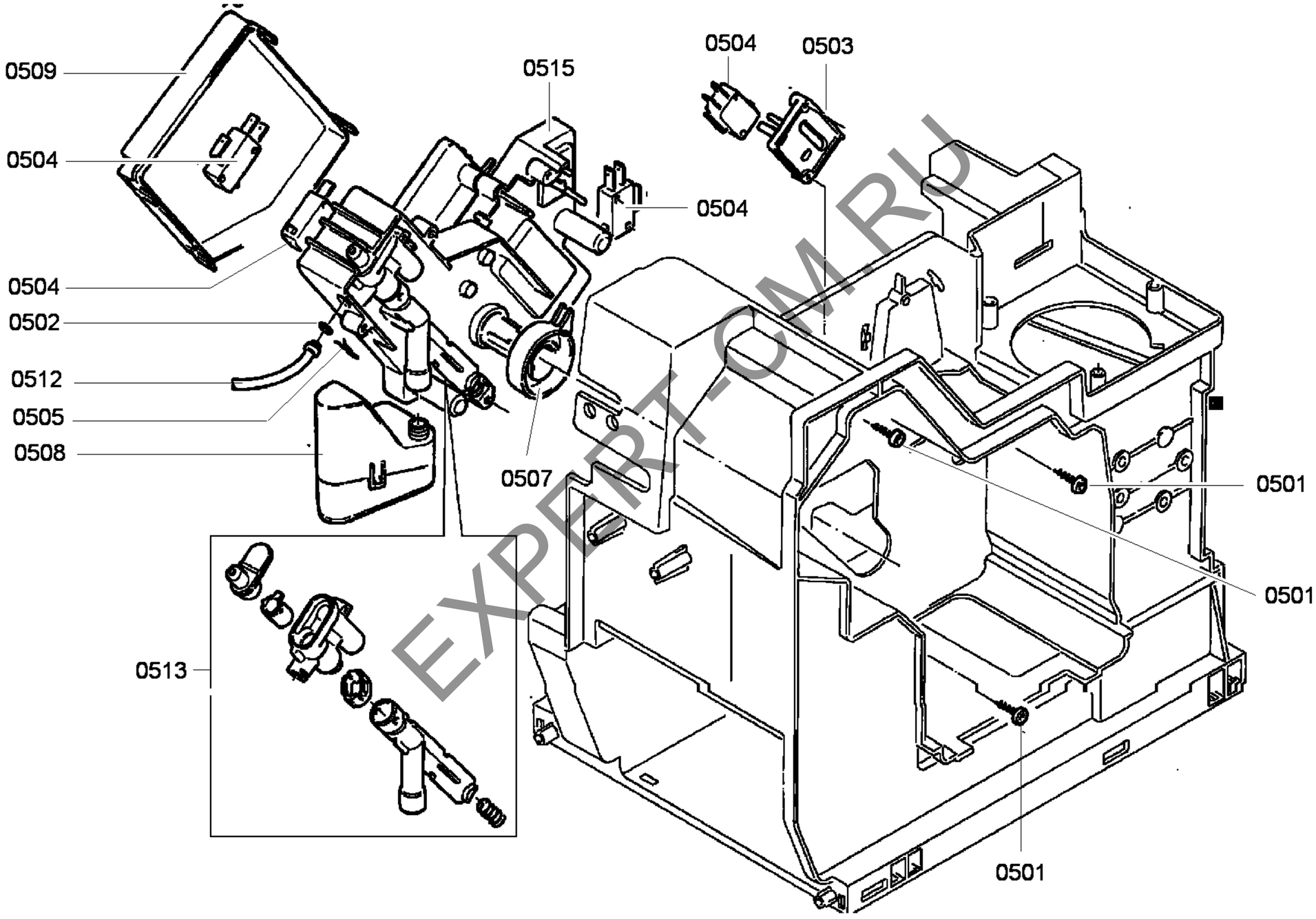

EXPERT-OM.RU

Copyright © (2011) by Bosch / SERRU_200100481_1

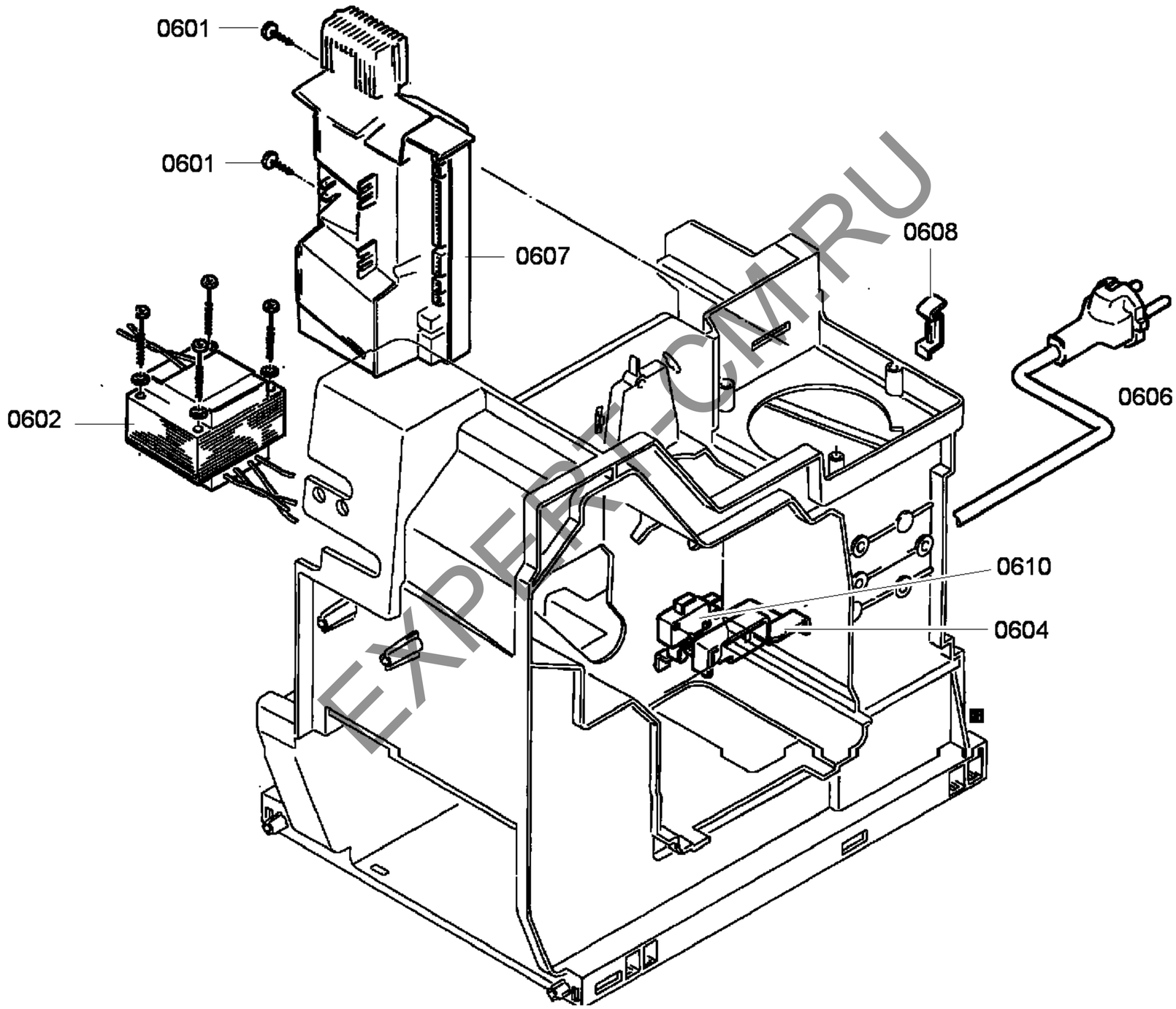

EXPERT-CM.RU

Copyright © (2011) by Bosch / SERRU_200100481_1

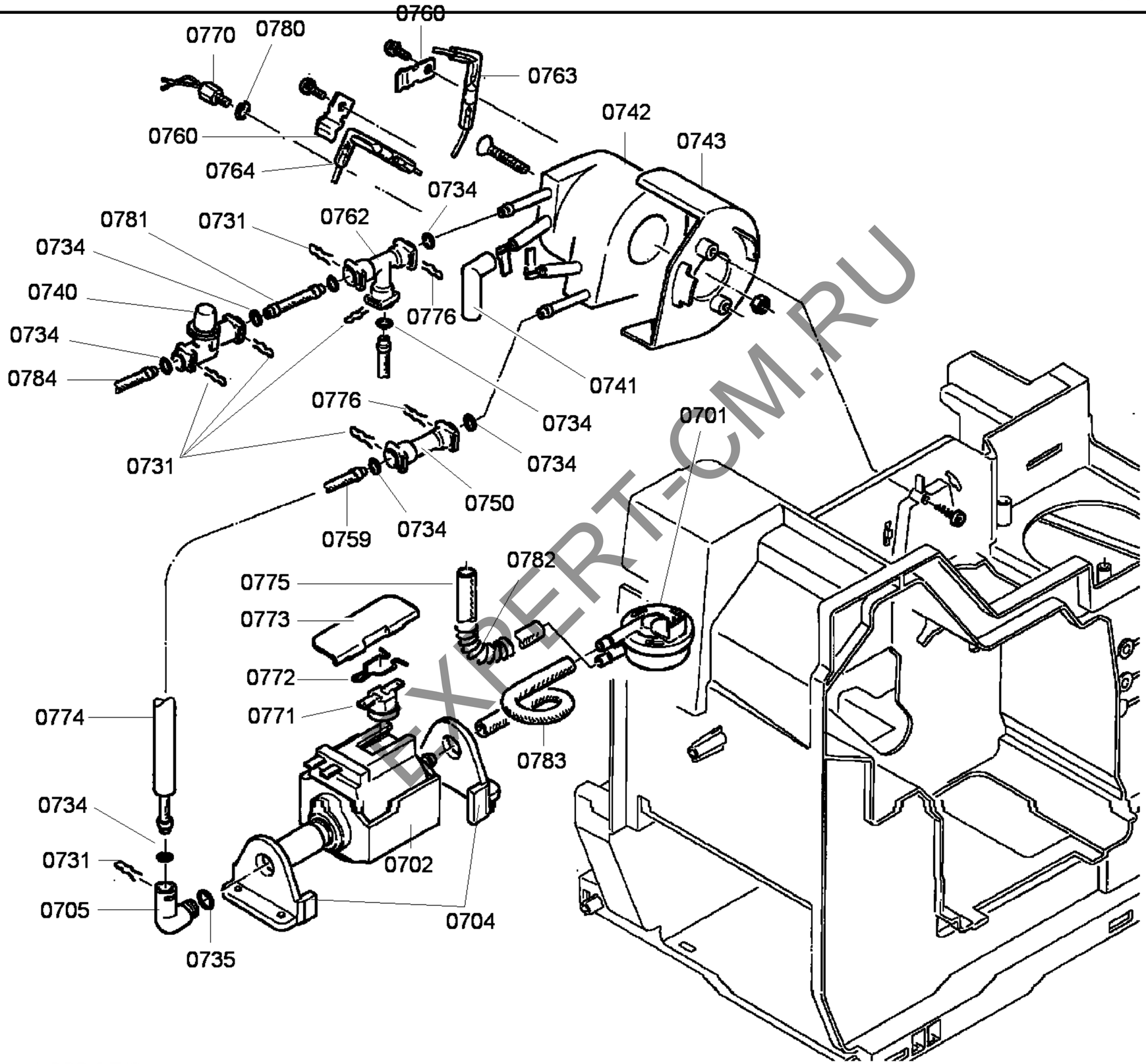

EXPERT-CM.RU

Copyright © (2011) by Bosch / SERRU_200100481_1

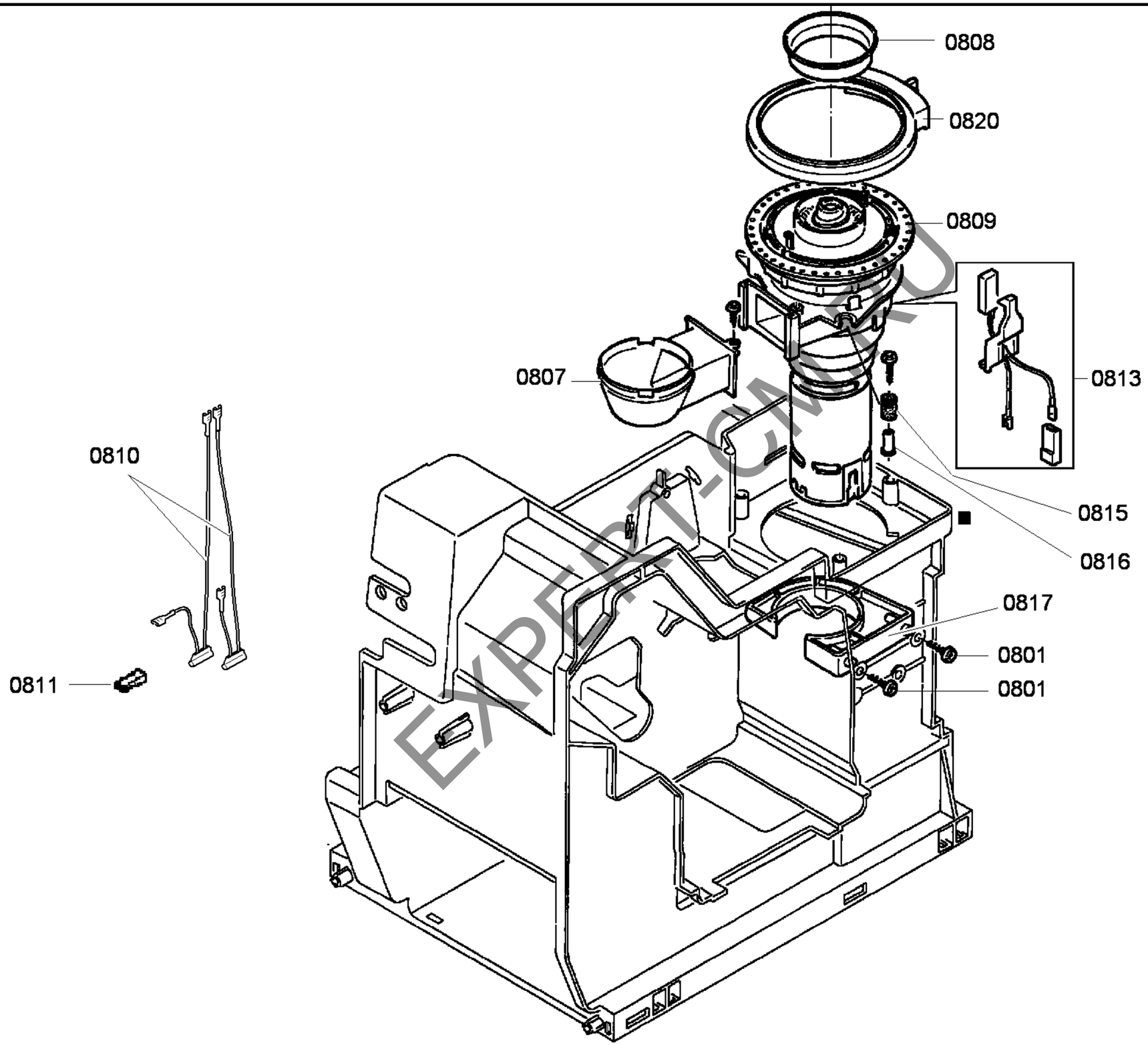

EXPERT-CMRU

Copyright © (2011) by Bosch / SERRU_200100481_1

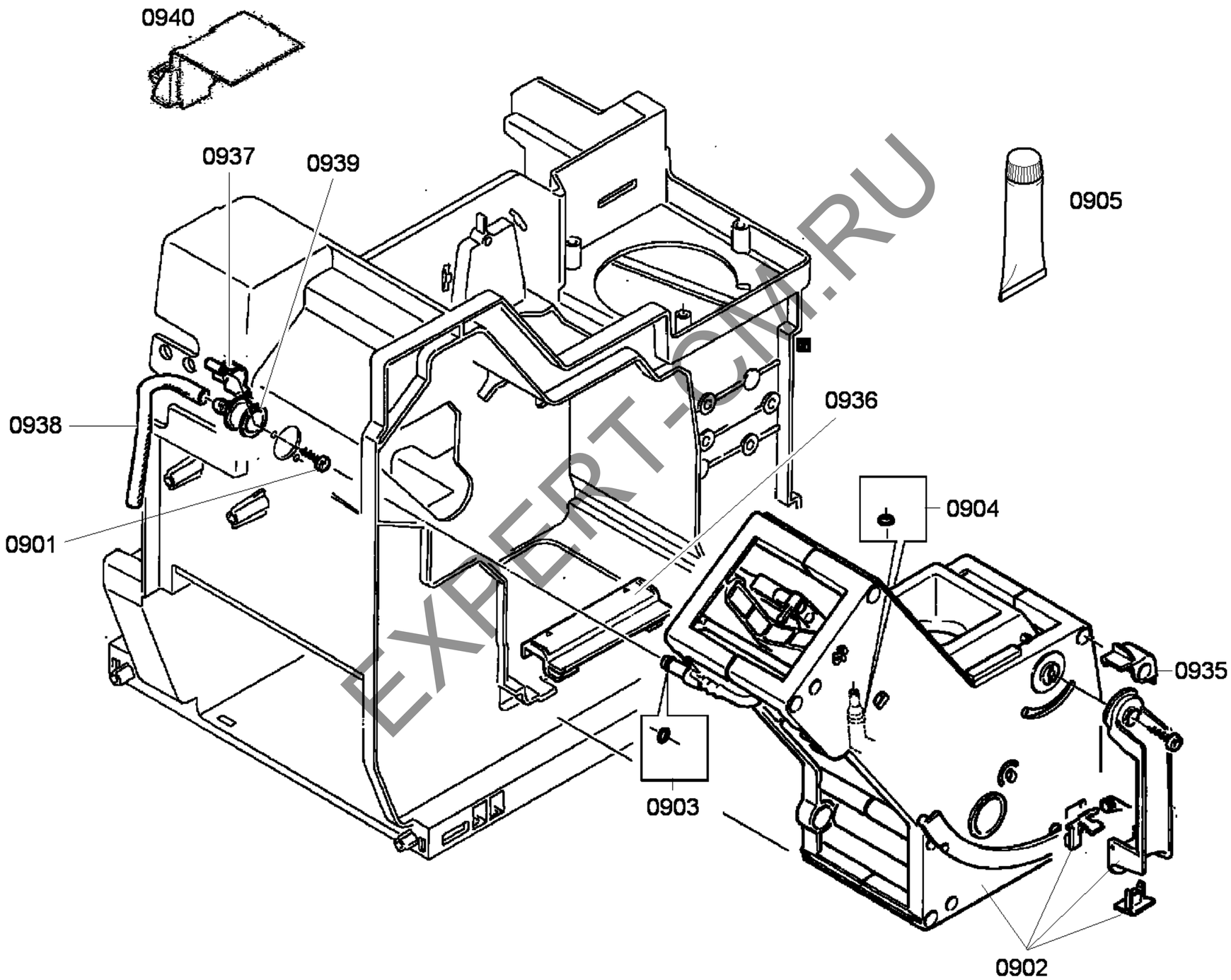

EXPERT-SM.RU

Copyright © (2011) by Bosch / SERRU_200100481_1