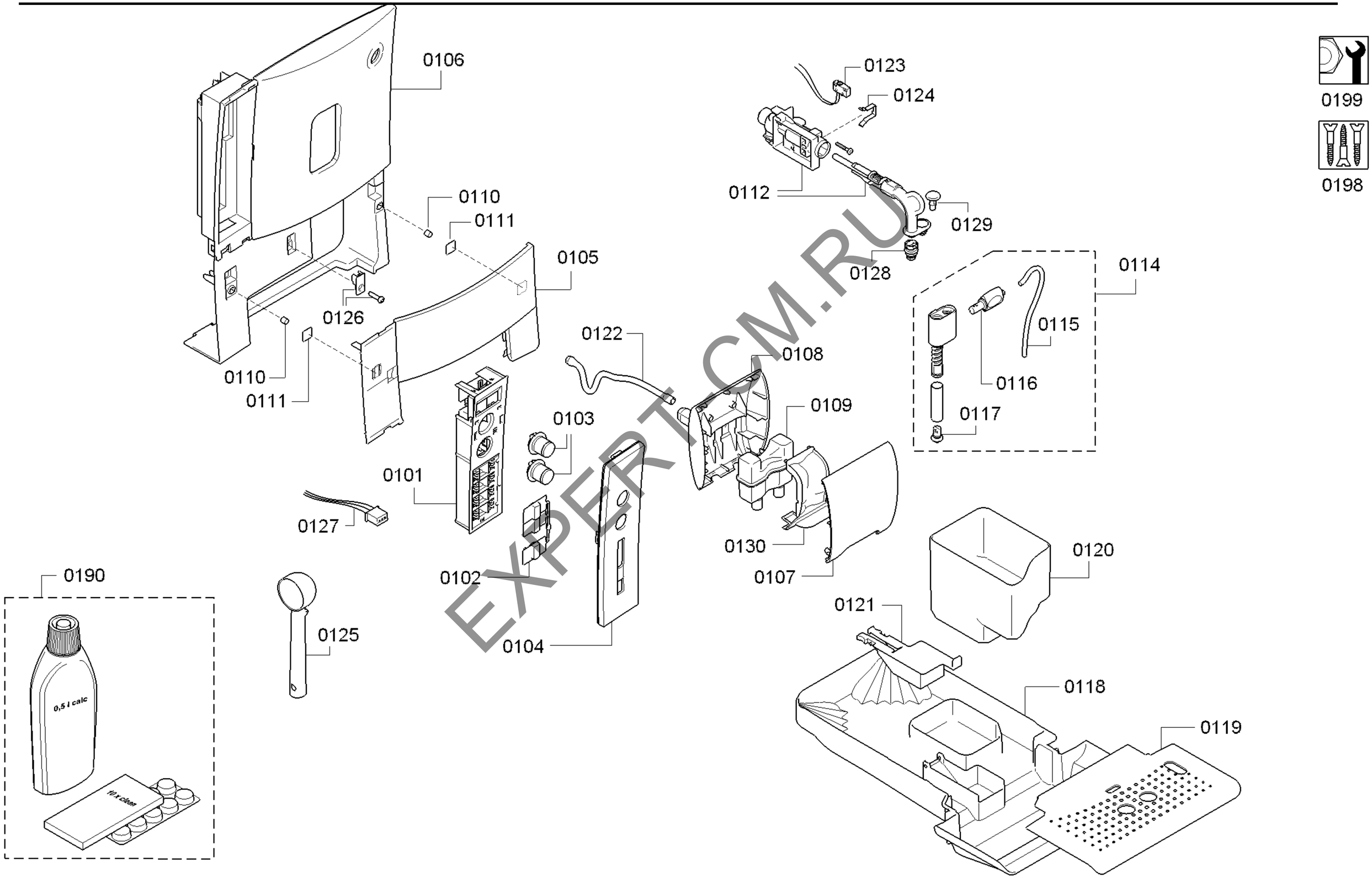

EXPERT-CM.RU

Copyright © (2014) by Bosch / SERRU_200100481_1

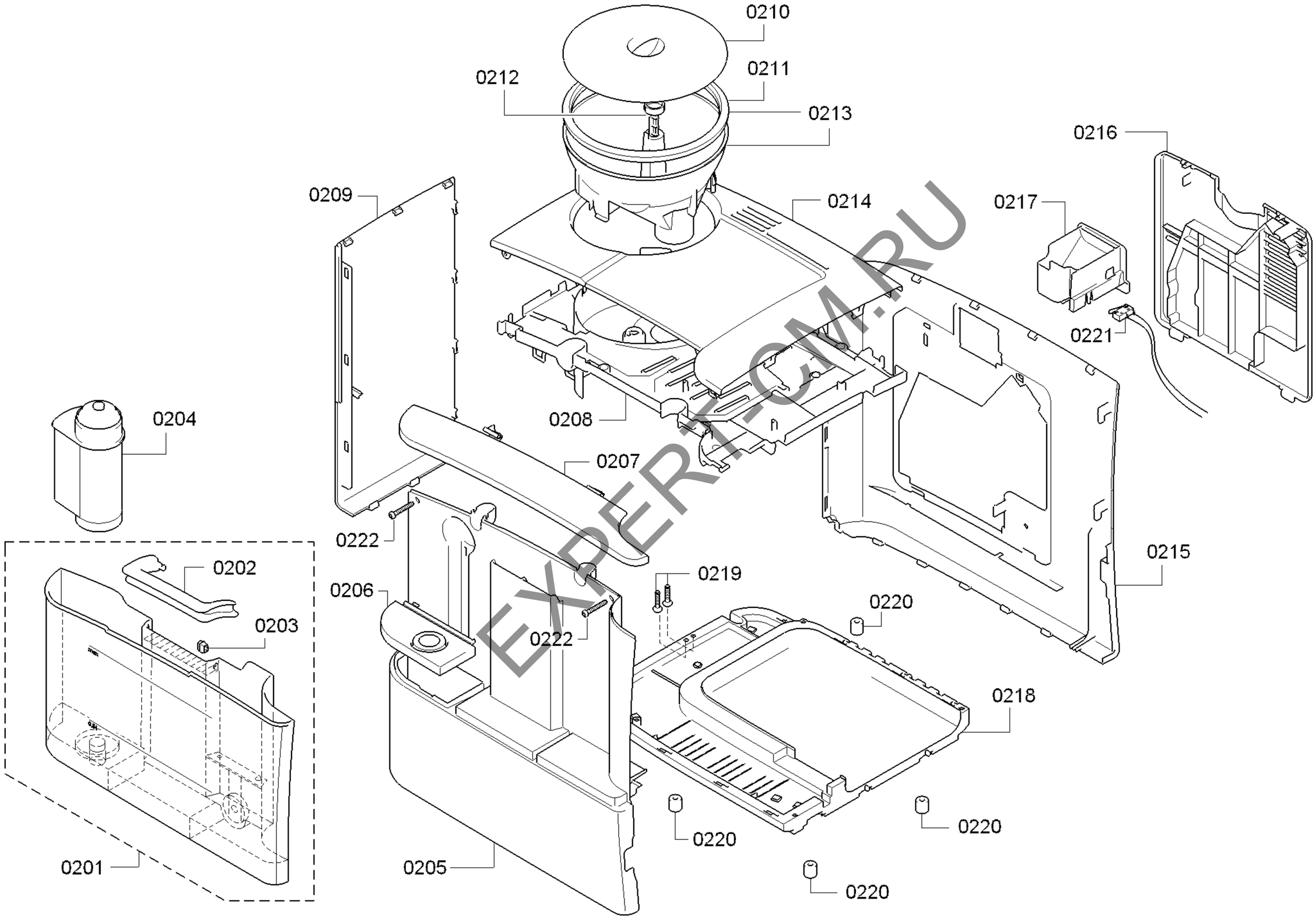

EXPERT-CM.RU

Copyright © (2014) by Bosch / SERRU_200100481_1

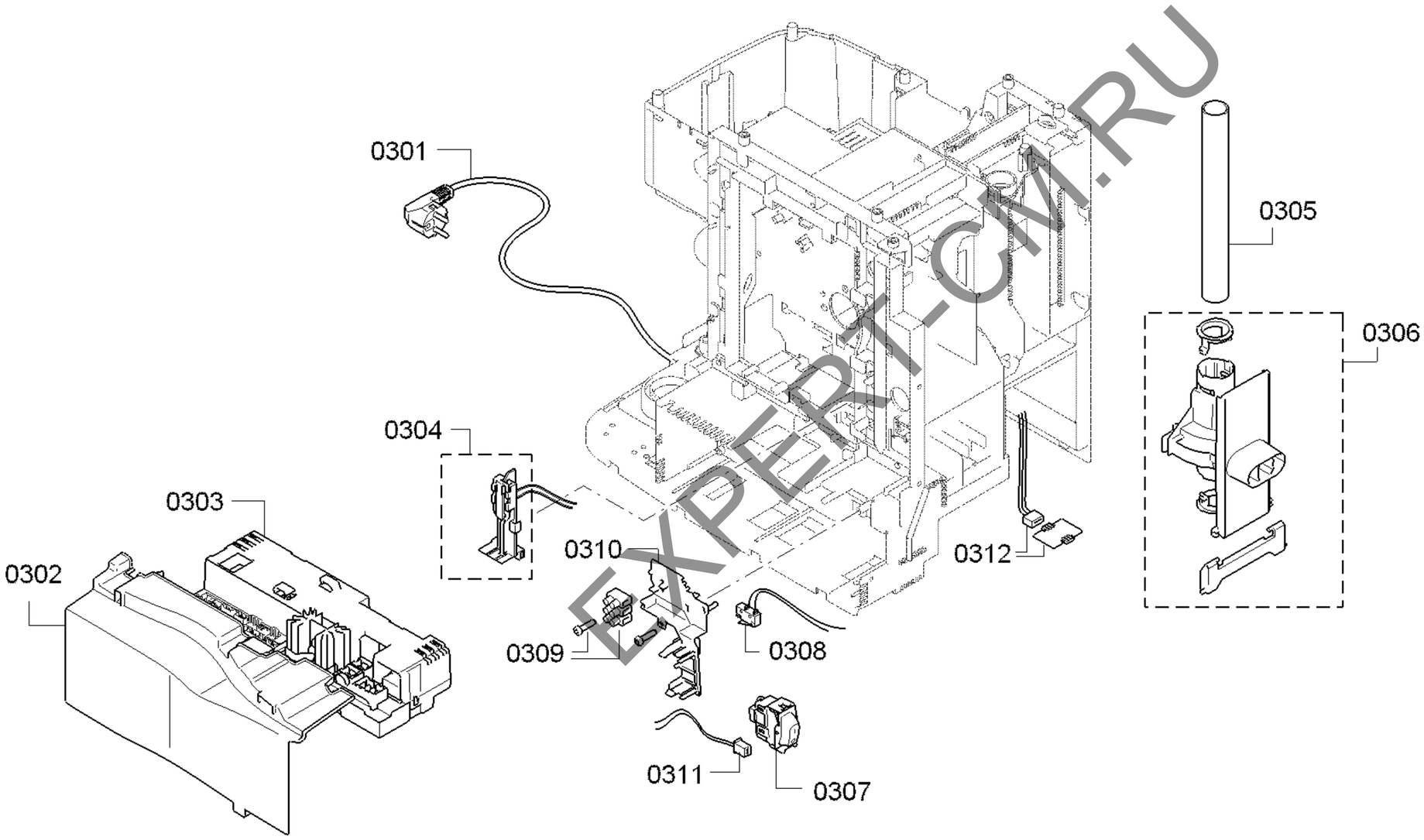

EXPERT-CM.RU

Copyright © (2014) by Bosch / SERRU_200100481_1

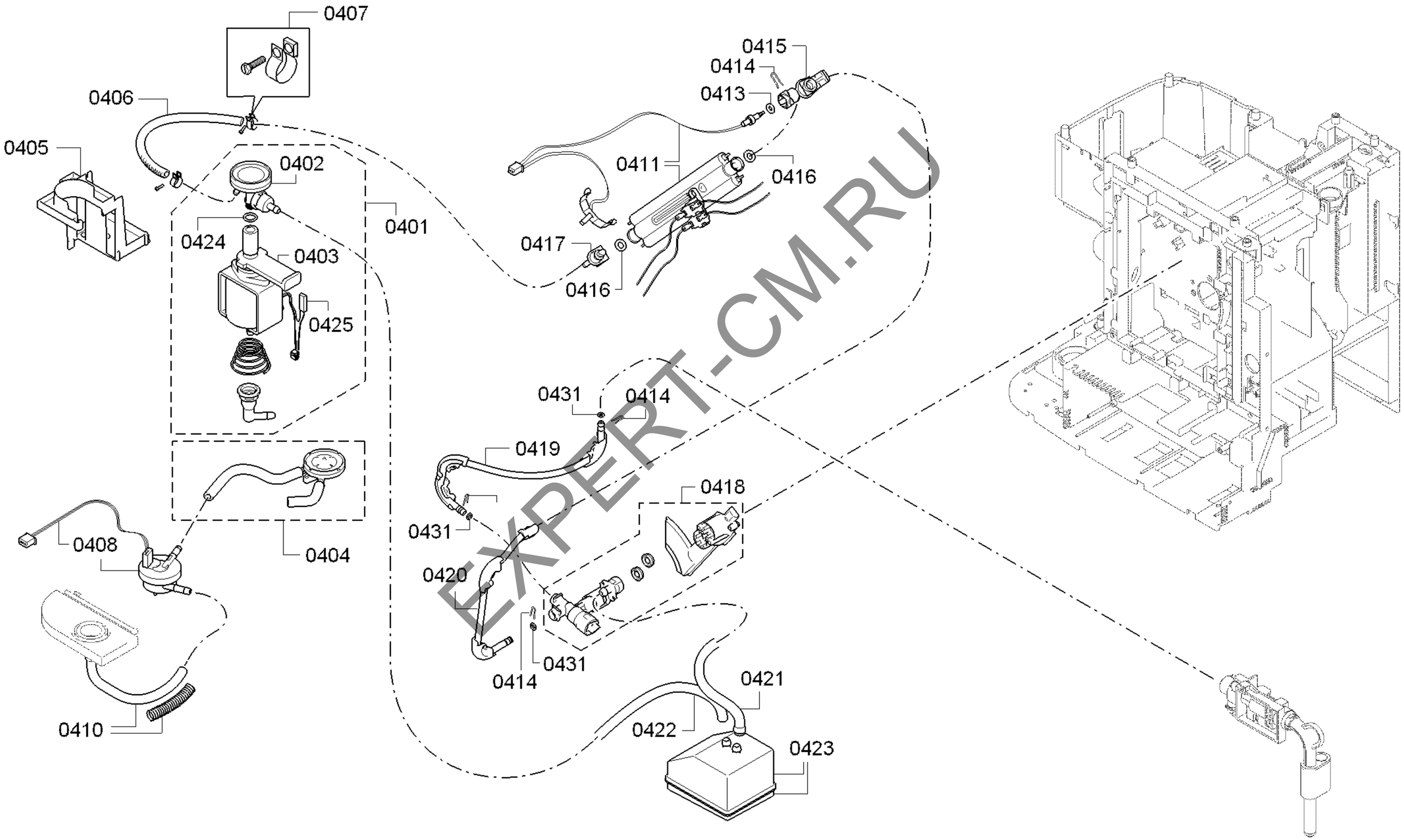

EXPERT-CM.RU

Copyright © (2014) by Bosch / SERRU_200100481_1

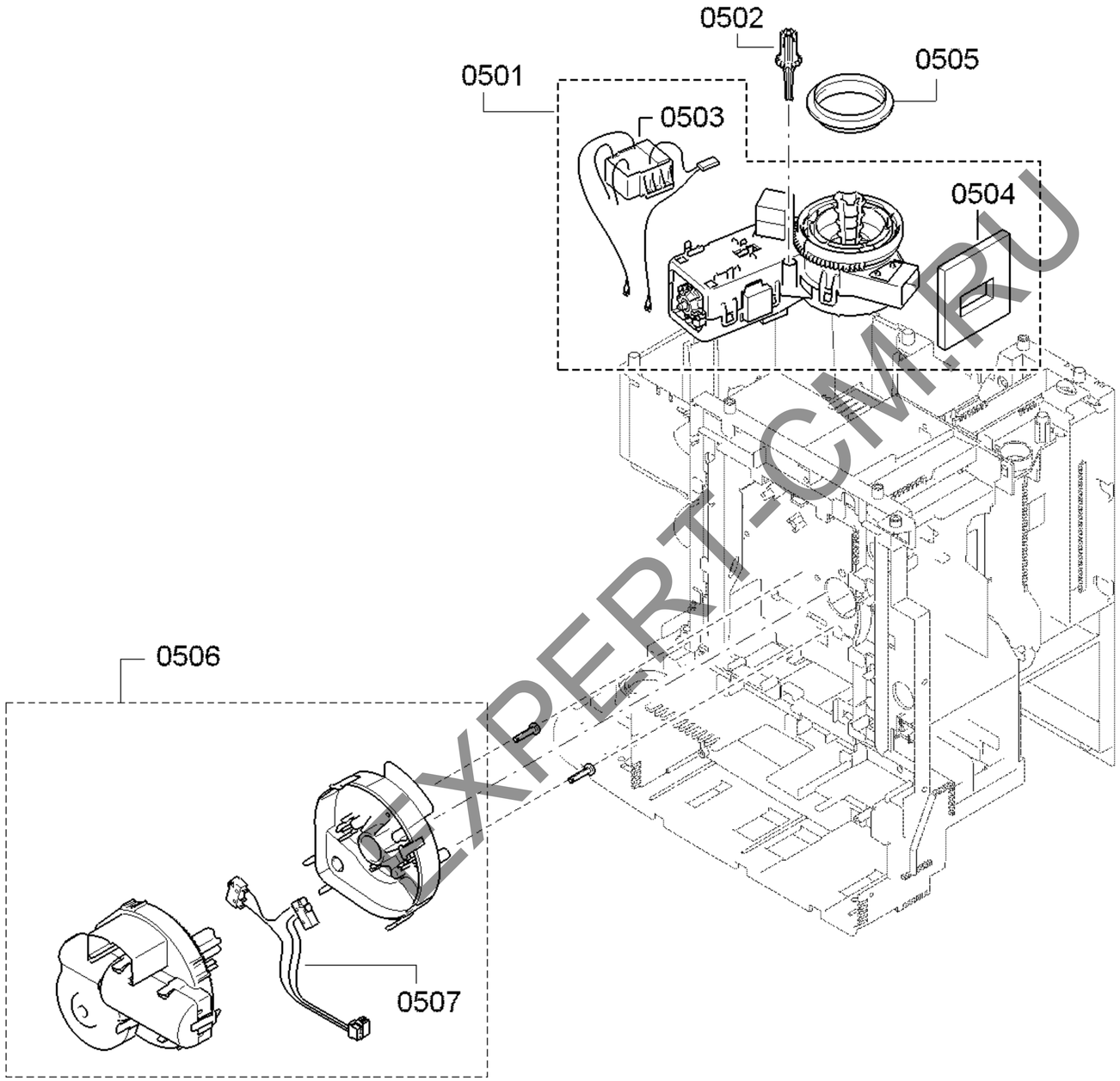

EXPERT-CM.RU

Copyright © (2014) by Bosch / SERRU_200100481_1

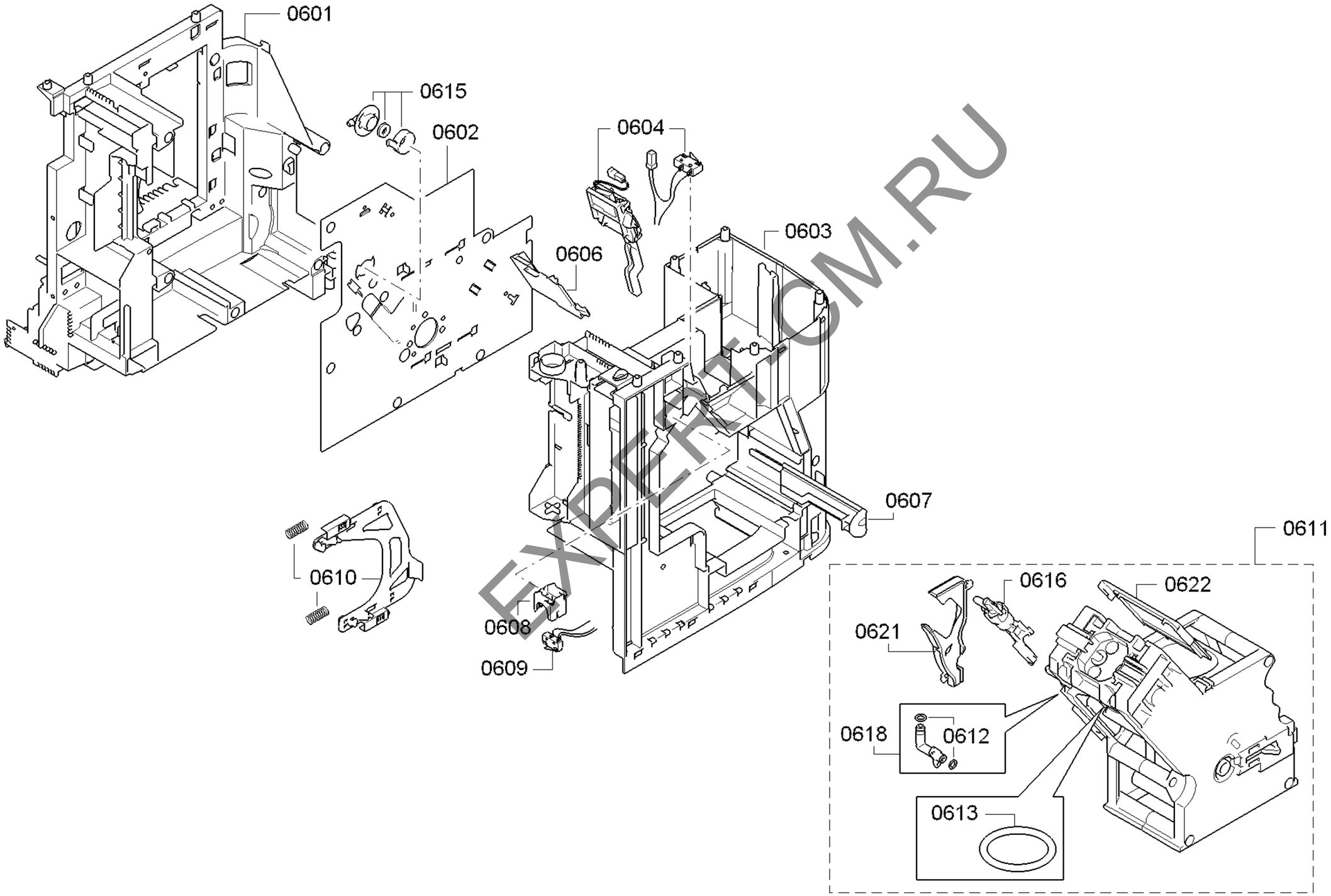

EXPERT-OM.RU

Copyright © (2014) by Bosch / SERRU_200100481_1