DIECI COFFEE GROUP

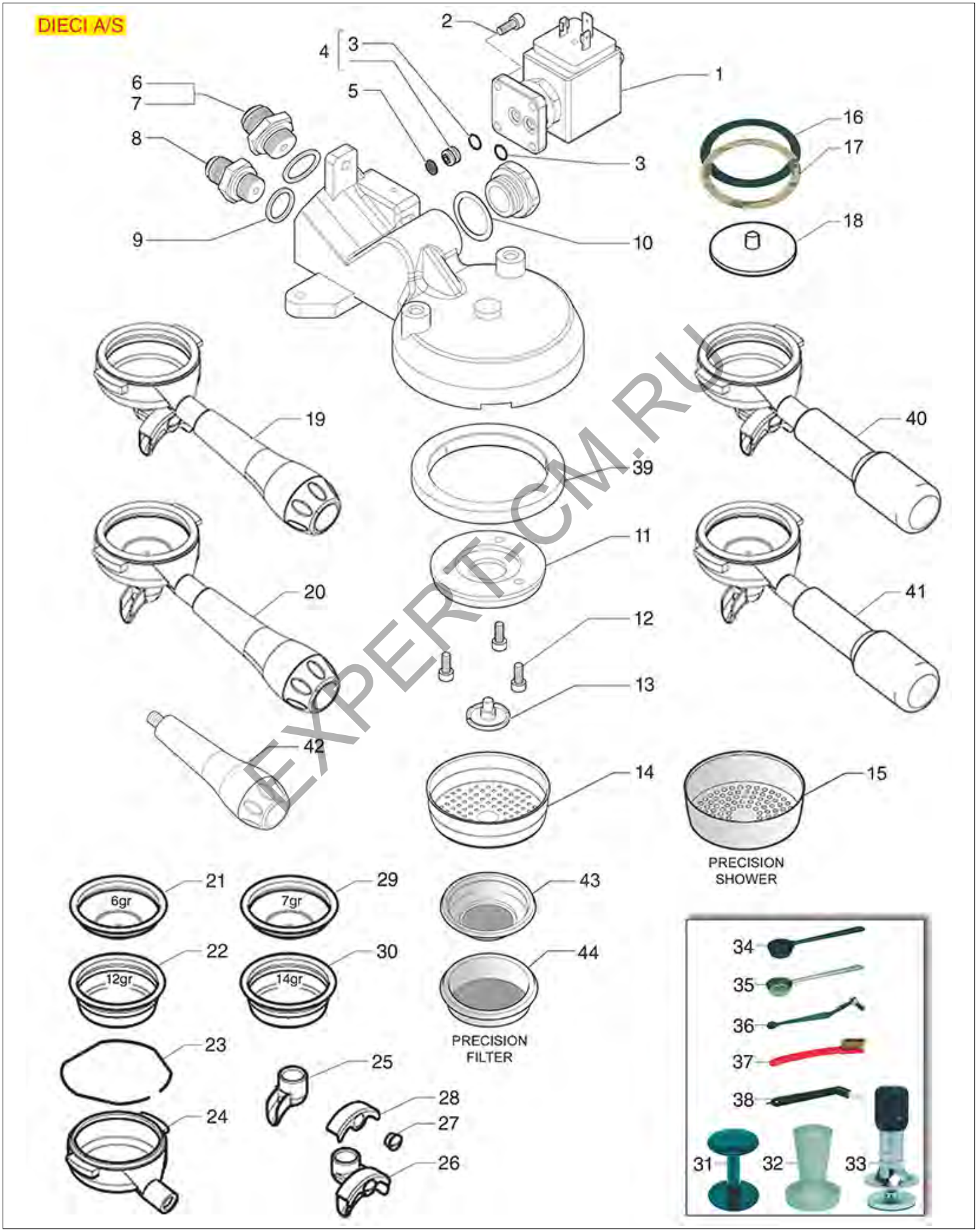

EXPERT-CM.RU

Positions without LF code no.: upon request

CASADIO

Position	LF code no.	Description
1	1120102	3-WAY SOLENOID VALVE LUCIFER 115V 60Hz
1	1120330	3-WAY SOLENOID VALVE LUCIFER 240V 50Hz
2	1455034	CYLINDER HEAD SCREW M4x10
3	1186966	ORM GASKET 0057-19 GREEN VITON
5	1160011	WATER FILTER ø 9 mm
9	1186619	COPPER FLAT GASKET ø 18x14x1.5 mm
10	1186248	PTFE FLAT GASKET ø 27x20x1 mm
11	1086003	SHOWER HOLDER DIFFUSER
12	1455034	CYLINDER HEAD SCREW M4x10
13	1510004	BREW GROUP SPRAY NOZZLE ø 21 mm M5x1
14	1081016	SHOWER SCREEN ø 60 mm
14	1081116	SHOWER SCREEN ø 60 mm
14	1081216	SHOWER SCREEN ø 60 mm
14	1081516	SHOWER ø 60 mm
15	1460201	PRECISION SHOWER SCREEN ø 60 mm
15	1460206	PRECISION SHOWER SCREEN ø 60 mm
16	1190002	RUBBER SHIM ø 73x59x1 mm EPDM
17	1190001	PAPER SHIM ø 73x59x0.8 mm
18	1160293	MEMBRANE BLIND FILTER ø 50 mm
19	1165097	COMPLETE FILTER HOLDER 2 CUPS CASADIO
20	1165096	COMPLETE FILTER HOLDER 1 CUP CASADIO
21	1160251	1 CUP FILTER 6 g ø 70x20.5 mm
22	1160252	FILTER 2-CUP 12 g ø 70x21 mm
23	1250101	FILTER LOCKING SPRING ø 1,00 mm INOX
24	1165142	FILTER HOLDER COFFEE MACH. FAEMA/CIMBALI
25	1022100	SPOUT 1 CUP M16
26	1022101	DOUBLE SPOUT SHORT M16
27	1160559	CHROME PLATED SCREW FOR SPOUT
29	1160335	1 CUP FILTER 7 g ø 70x24,5 mm
30	1160337	FILTER 2-CUP 14 g ø 70x24,5 mm
31	1385000	NYLON TAMPER ø 50/52 mm
31	1385002	NYLON COFFEE TAMPER ø 50/57 mm
32	1385053	ANODIZED ALUMINIUM TAMPER ø 58 mm
32	1385054	ANODIZED ALUMINIUM TAMPER ø 53 mm
33	1385600	DYNAMOMETRIC MANUAL COFFEE TAMPER ø 57mm
33	1385601	DYNAMOMETRIC MANUAL TAMPER ø 52 mm
34	1069001	PLASTIC MEASURING SPOON 20 ml
35	1069002	STAINLESS STEEL MEASURING SPOON 20 ml
36	1384003	SHOWER CLEANING BRUSH BLACK
37	1384002	BRUSH FOR MAINTENANCE
38	1384001	SHOWER CLEANING BRUSH
39	1186721	FILTER HOLDER GASKET ø 74x57.5x8 mm
39	5028118	GASKET FILTER HOLDER ø 74x58x8 mm
40	5074187	FILTERHOLDER COMPLETE 2 CUPS
41	5076313	FILTERHOLDER COMPLETE 1 CUP
42	1141017	FILTER HOLDER HANDLE M10
43	1460100	PRECISION FILTER 1 CUP 6/8 g H24.5
43	1460101	PRECISION FILTER 1 CUP 7/9 g H26.5
44	1460102	PRECISION FILTER 2 CUPS 12/18 g H24.5
44	1460103	PRECISION FILTER 2 CUPS 14/20 g H26.5
44	1460104	PRECISION FILTER 2 CUPS 18/22 g H28.5

EXPERT-CM.RU

DIECI BODIE-HYDRAULIC-ELECTRICAL

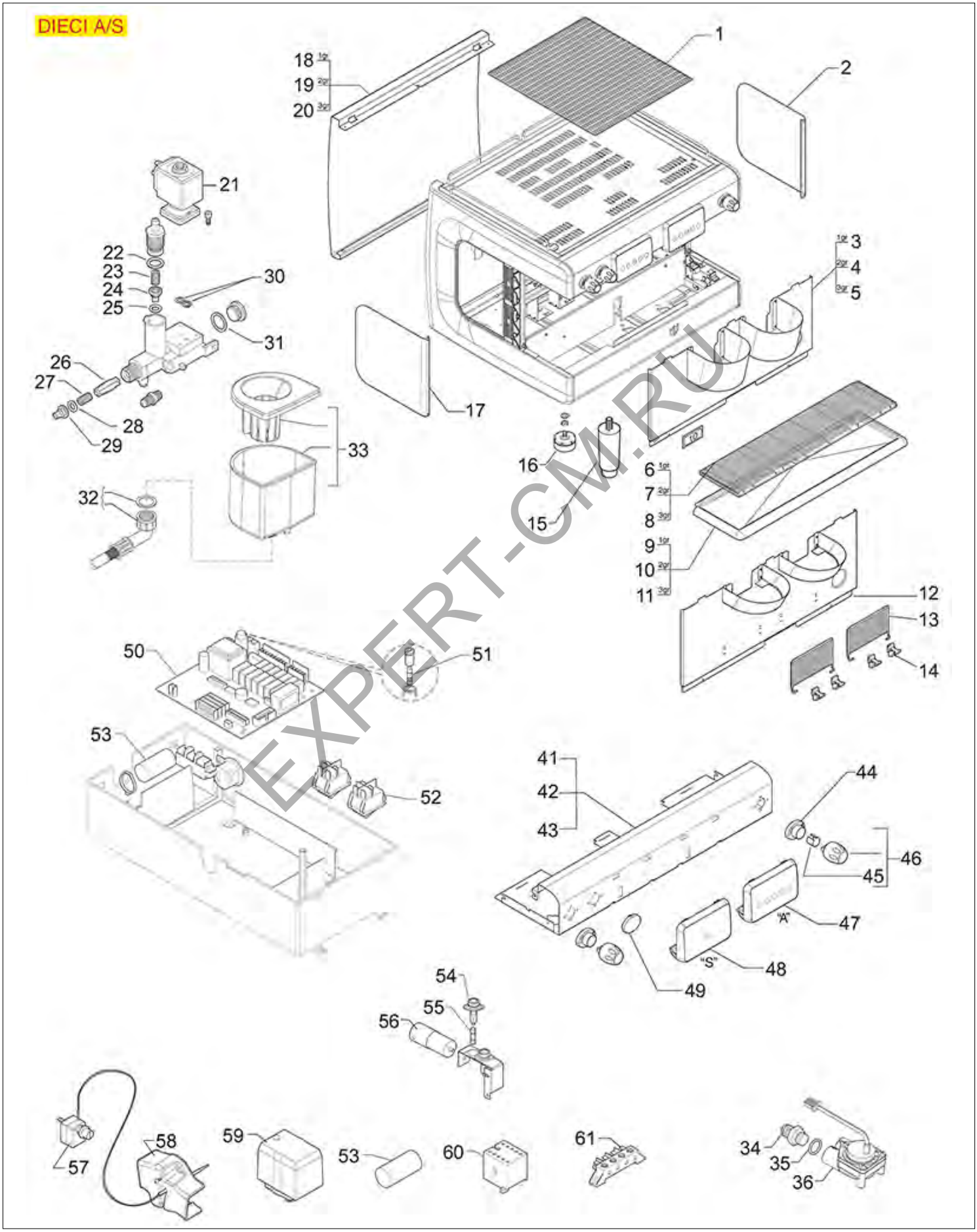

EXPERT-CM.RU

Positions without LF code no.: upon request

CASADIO

Position	LF code no.	Description
1	1185029	CUP WARMING GRID
16	1313016	FOOT ø 60 mm M10 H=30÷40 mm
21	1120192	2-WAY SOLENOID VALVE ODE 230/240V 8W
22	3060608	O-RING O3050 EPDM
23	5060506	SPRING ø 8.3x21 mm
24	1523066	CHECK VALVE
25	1786197	O-RING 03030 GREEN VITON
28	1786197	O-RING 03030 GREEN VITON
29	1523066	CHECK VALVE
30	1186966	ORM GASKET 0057-19 GREEN VITON
31	1186957	FLAT GASKET PTFE ø 22x17x1,5 mm
32	1449876	DRAIN HOSE ø 3/4"F 1500 mm
33	1527037	DRAIN TANK
35	1186950	O-RING 02043 GREEN VITON
36	1455058	VOLUMETRIC FLOW METER GICAR
36	5053707	VOLUMETRIC FLOW METER GICAR
45	1241561	ELASTIC RING FOR KNOB
46	1241167	WATER/STEAM TAP KNOB
47	1319434	PUSH-BUTTON PANEL 5 BUTTONS
48	1319435	PUSH-BUTTON PANEL 1 BUTTON
50	5050407	ELECTRONIC BOARD CPU UNIFIED
51	3049052	QUICK ACTING FUSE ø 5x20 mm - 10 PCS
52	1319202	BIPOLAR SWITCH GREEN 16A 250V
56	3068080	CAPACITOR ELECTRICAL 10µF
57	5047881	SINGLE-PHASE THERMOSTAT 170°c
59	1320803	PRESSURE SWITCH P303T02 3-POLES 20A 1/4"
60	1454001	CONTACTOR ALLEN-BRADLEY K09 20A 400V
61	3247037	TERMINAL BLOCK 4-POLES FV173 40A 600V

EXPERT-CM.RU

DIECI WATER/STEAM TAP & BOILER

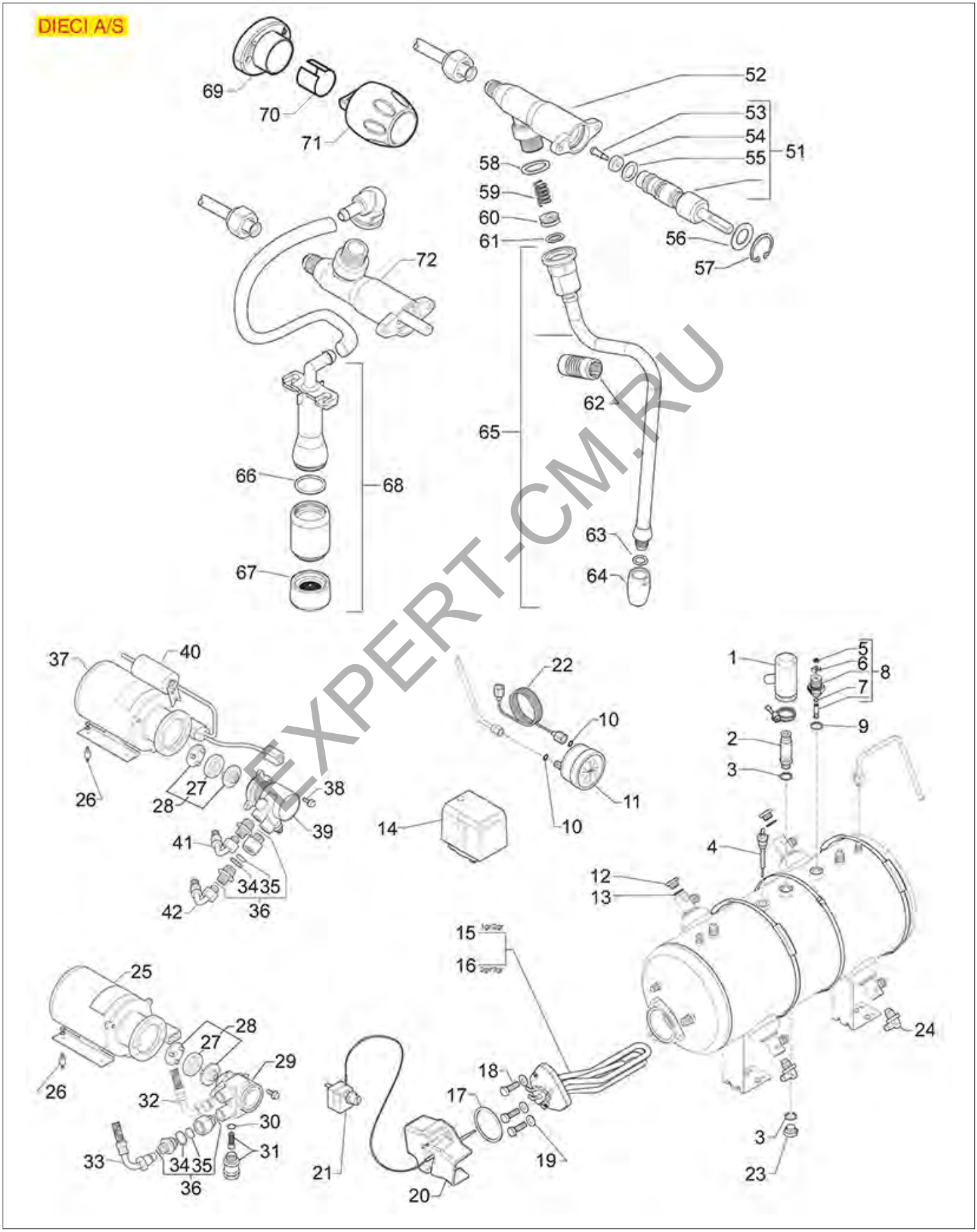

EXPERT-CM.RU

Positions without LF code no.: upon request

CASADIO

Position	LF code no.	Description
1	5084070	SAFETY VALVE PROTECTION FOR BOILER
2	1515004	BOILER VALVE ø 1/4"M - 2.0 bar CE/PED
3	1786166	PTFE FLAT GASKET ø 18x14x1.5 mm
4	1341038	LEVEL PROBE ø 1/4"M-89 mm
5	1348813	HEXAGONAL NUT M4 MEDIUM
7	1186362	O-RING 02021 EPDM
8	1523538	BOILER EXHAUST VALVE ø 1/4"M
9	1786166	PTFE FLAT GASKET ø 18x14x1.5 mm
10	1186974	FLAT PTFE GASKET ø 8.5x4.5x1.5 mm
11	1245047	BOILER-PUMP PRESSURE GAUGE ø 62 mm
11	1245094	PRESSURE GAUGE BOILER-PUMP ø 62 mm
13	1186619	COPPER FLAT GASKET ø 18x14x1.5 mm
14	1320803	PRESSURE SWITCH P303T02 3-POLES 20A 1/4"
15	1755236	HEATING ELEMENT 2700W 220V
16	1755235	HEATING ELEMENT 5400/6430W 220/400V
17	1186607	FLAT CARBO GASKET ø 57.8x50x3 mm
18	1184008	HEXAGON HEAD SCREW M8x25
21	5047881	SINGLE-PHASE THERMOSTAT 170°c
25	1240295	MOTOR SMA WITH FLANGE 150W UL
27	1191002	RUBBER COUPLING ø 41.5 mm
28	1191003	COMPLETE METAL COUPLING
29	1330018	ROTARY VANE PUMP CIMBALI/FAEMA ø 3/8"
29	1330031	ROTARY VANE PUMP ROTOFLOW ø 3/8" GAS
29	1330033	VOLUMETRIC PUMP PROCON ø 3/8" NPT
29	1330200	ROTARY VANE PUMP NUERT ø 3/8" GAS/BSP
34	1186969	FLAT GASKET PTFE ø 25x21x1,5 mm
35	1160068	WATER FILTER ø 26 mm
36	1160700	COUPLING WITH FILTER ø 3/8"M - 3/8"M
37	1240296	MOTOR SMA WITH FLANGE 150W
38	3528112	HEXAGONAL HEAD SCREW M6x16
39	1330017	VOLUMETRIC PUMP PROCON ø 3/8" NPT
40	3068080	CAPACITOR ELECTRICAL 10µF
42	5500682	HOSE FLEX ø 3/8"Fc x 3/8"CFc 2200 mm
51	1348111	TAP SPINDLE
52	5050244	WATER/STEAM TAP HOUSING
53	1184019	SCREW PIN FOR WATER/STEAM TAP
54	1186927	FLAT VITON GASKET ø 12x3.5x4 mm
55	1186236	O-RING 03043 VITON
56	1186299	WASHER ø 21x16x1 mm
57	1348029	CIRCLIPS J-22
58	1186957	FLAT GASKET PTFE ø 22x17x1,5 mm
59	1250226	TAP PIPE SPRING ø 11x24 mm
60	1186344	CONICAL PTFE SEAL ø 14.5x7.5x6 mm
61	1186346	O-RING 02043 EPDM
62	1186924	BURN PREVENTING PIPE HANDGRIP ø 10 mm
63	1186411	O-RING 02031 EPDM
64	1549012	STEAM NOZZLE ST. STEEL ø 1/8"F
65	1549005	ST.STEEL COMPLETE STEAM PIPE ø 10 mm
66	1786165	O-RING 02068 GREEN VITON
68	1449209	COMPLETE WATER PIPE
70	1241561	ELASTIC RING FOR KNOB
71	1241167	WATER/STEAM TAP KNOB

EXPRESSM.RU

UNDICI COFFEE GROUP

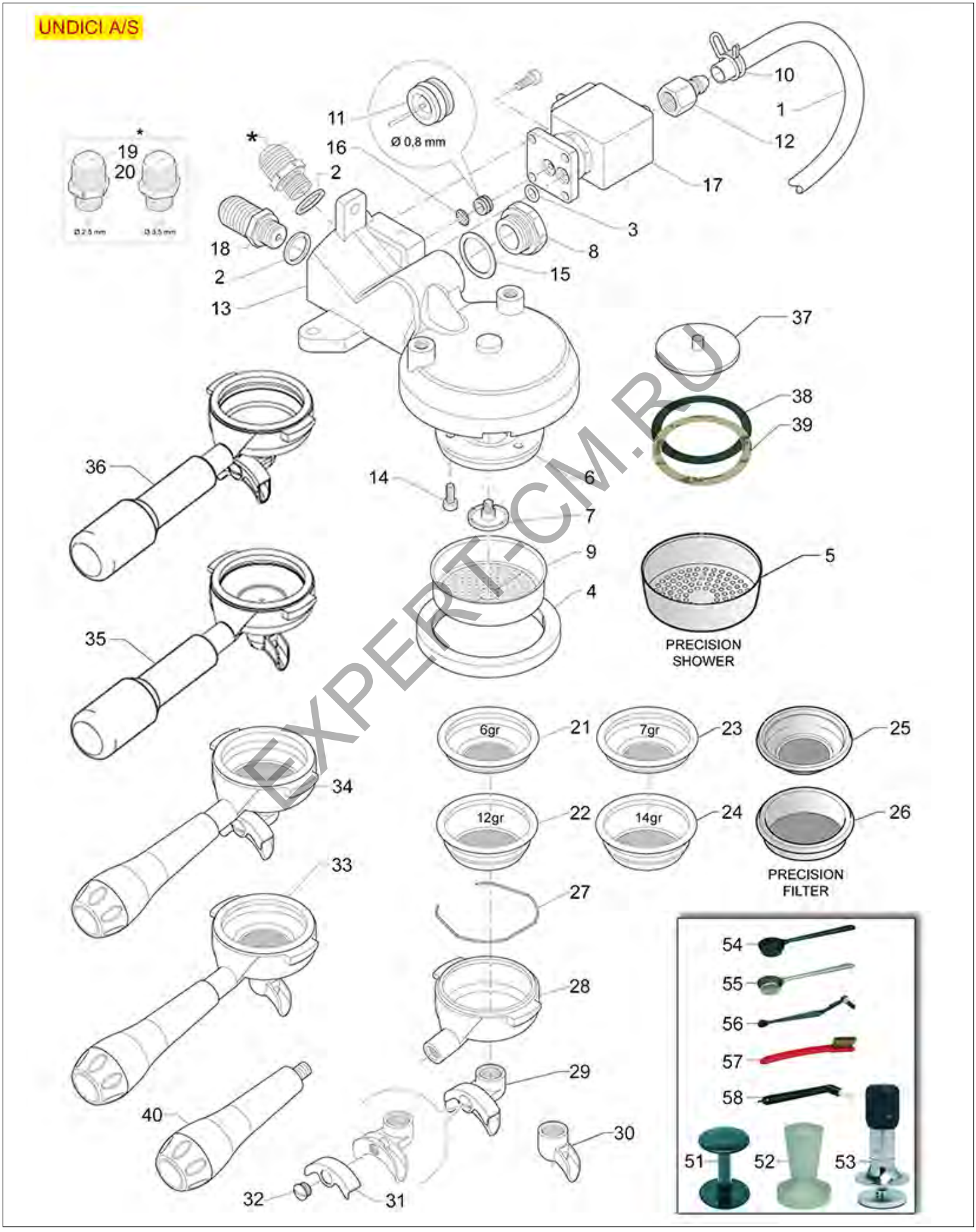

Positions without LF code no.: upon request

CASADIO

Position	LF code no.	Description
1	1449285	SILICONE HOSE ø 6x10 SHORE 60 - 100 m
1	1449685	SILICONE HOSE ø 6x10 SHORE 60 - 5 m
2	1186619	COPPER FLAT GASKET ø 18x14x1.5 mm
3	1186966	ORM GASKET 0057-19 GREEN VITON
4	1186721	FILTER HOLDER GASKET ø 74x57.5x8 mm
4	5028118	GASKET FILTER HOLDER ø 74x58x8 mm
5	1460201	PRECISION SHOWER SCREEN ø 60 mm
5	1460206	PRECISION SHOWER SCREEN ø 60 mm
6	1086003	SHOWER HOLDER DIFFUSER
7	1510004	BREW GROUP SPRAY NOZZLE ø 21 mm M5x1
9	1081016	SHOWER SCREEN ø 60 mm
9	1081116	SHOWER SCREEN ø 60 mm
9	1081216	SHOWER SCREEN ø 60 mm
9	1081516	SHOWER ø 60 mm
10	3449406	DOUBLE-WIRE CLAMP 11-11.6 - 100 PCS
14	1455034	CYLINDER HEAD SCREW M4x10
15	1186248	PTFE FLAT GASKET ø 27x20x1 mm
16	1160011	WATER FILTER ø 9 mm
17	1120102	3-WAY SOLENOID VALVE LUCIFER 115V 60Hz
17	1120268	SOLENOID VALVE ODE 3 WAYS 230V 50/60Hz
17	1120330	3-WAY SOLENOID VALVE LUCIFER 240V 50Hz
21	1160251	1 CUP FILTER 6 g ø 70x20.5 mm
22	1160252	FILTER 2-CUP 12 g ø 70x21 mm
23	1160335	1 CUP FILTER 7 g ø 70x24,5 mm
24	1160337	FILTER 2-CUP 14 g ø 70x24,5 mm
25	1460100	PRECISION FILTER 1 CUP 6/8 g H24.5
25	1460101	PRECISION FILTER 1 CUP 7/9 g H26.5
26	1460102	PRECISION FILTER 2 CUPS 12/18 g H24.5
26	1460103	PRECISION FILTER 2 CUPS 14/20 g H26.5
26	1460104	PRECISION FILTER 2 CUPS 18/22 g H28.5
27	1250002	S/STEEL FILTER LOCKING SPRING ø 1.20 mm
27	1250101	FILTER LOCKING SPRING ø 1,00 mm INOX
27	1250333	FILTER LOCKING SPRING ø 1.30 mm ST.STEEL
27	1250338	FILTER LOCKING SPRING ø 1.40 mm ST.STEEL
28	1165142	FILTER HOLDER COFFEE MACH. FAEMA/CIMBALI
29	1022101	DOUBLE SPOUT SHORT M16
30	1022100	SPOUT 1 CUP M16
32	1160559	CHROME PLATED SCREW FOR SPOUT
33	1165096	COMPLETE FILTER HOLDER 1 CUP CASADIO
34	1165097	COMPLETE FILTER HOLDER 2 CUPS CASADIO
35	5076313	FILTERHOLDER COMPLETE 1 CUP
36	5074187	FILTERHOLDER COMPLETE 2 CUPS
37	1160293	MEMBRANE BLIND FILTER ø 50 mm
38	1190002	RUBBER SHIM ø 73x59x1 mm EPDM
39	1190001	PAPER SHIM ø 73x59x0.8 mm
40	1141017	FILTER HOLDER HANDLE M10
51	1385000	NYLON TAMPER ø 50/52 mm
51	1385002	NYLON COFFEE TAMPER ø 50/57 mm
52	1385053	ANODIZED ALUMINIUM TAMPER ø 58 mm
52	1385054	ANODIZED ALUMINIUM TAMPER ø 53 mm
53	1385600	DYNAMOMETRIC MANUAL COFFEE TAMPER ø 57mm
53	1385601	DYNAMOMETRIC MANUAL TAMPER ø 52 mm
54	1069001	PLASTIC MEASURING SPOON 20 ml
55	1069002	STAINLESS STEEL MEASURING SPOON 20 ml
56	1384003	SHOWER CLEANING BRUSH BLACK
57	1384002	BRUSH FOR MAINTENANCE
58	1384001	SHOWER CLEANING BRUSH

EXPLOSION.COM.RU

UNDICI BODIE-HYDRAULIC-ELECTRICAL

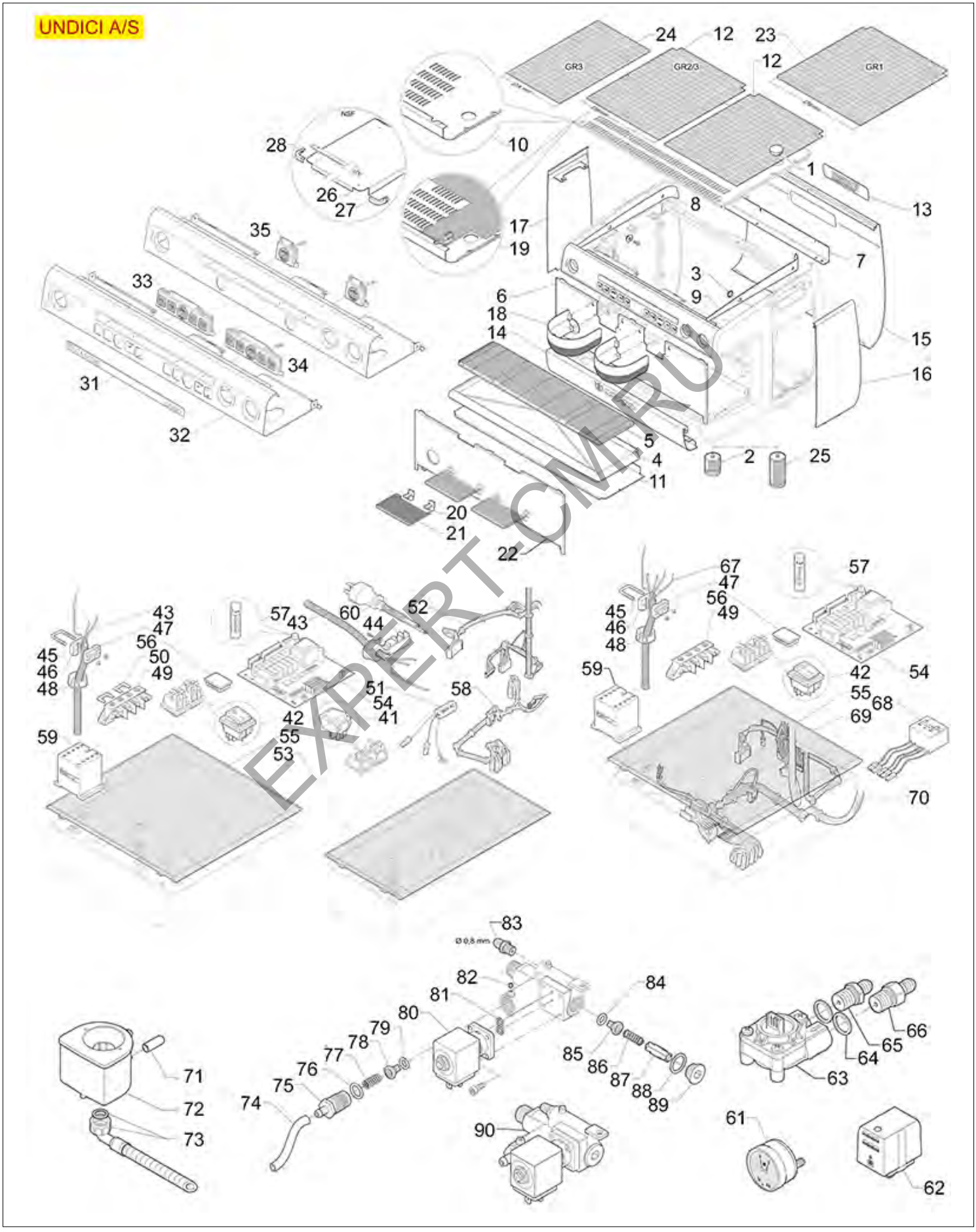

EXPERT-CM.RU

Positions without LF code no.: upon request

CASADIO

Position	LF code no.	Description
41	1319202	BIPOLAR SWITCH GREEN 16A 250V
42	3319362	BIPOLAR SWITCH GREEN 16A 250V
49	3247037	TERMINAL BLOCK 4-POLES FV173 40A 600V
54	5050407	ELECTRONIC BOARD CPU UNIFIED
57	3049052	QUICK ACTING FUSE ø 5x20 mm - 10 PCS
59	1454001	CONTACTOR ALLEN-BRADLEY K09 20A 400V
61	1245091	MANOMETER BOILER-PUMP ø 62 mm
62	1320803	PRESSURE SWITCH P303T02 3-POLES 20A 1/4"
63	1455058	VOLUMETRIC FLOW METER GICAR
63	5053707	VOLUMETRIC FLOW METER GICAR
72	1527037	DRAIN TANK
73	1449876	DRAIN HOSE ø 3/4"F 1500 mm
74	1449285	SILICONE HOSE ø 6x10 SHORE 60 - 100 m
74	1449685	SILICONE HOSE ø 6x10 SHORE 60 - 5 m
76	3060608	O-RING O3050 EPDM
77	5060506	SPRING ø 8.3x21 mm
79	1186358	O-RING 03030 EPDM
80	1120192	2-WAY SOLENOID VALVE ODE 230/240V 8W
81	1186966	ORM GASKET 0057-19 GREEN VITON
84	1186358	O-RING 03030 EPDM
88	1186957	FLAT GASKET PTFE ø 22x17x1,5 mm

EXPERT-CM.RU

UNDICI WATER/STEAM TAP & BOILER

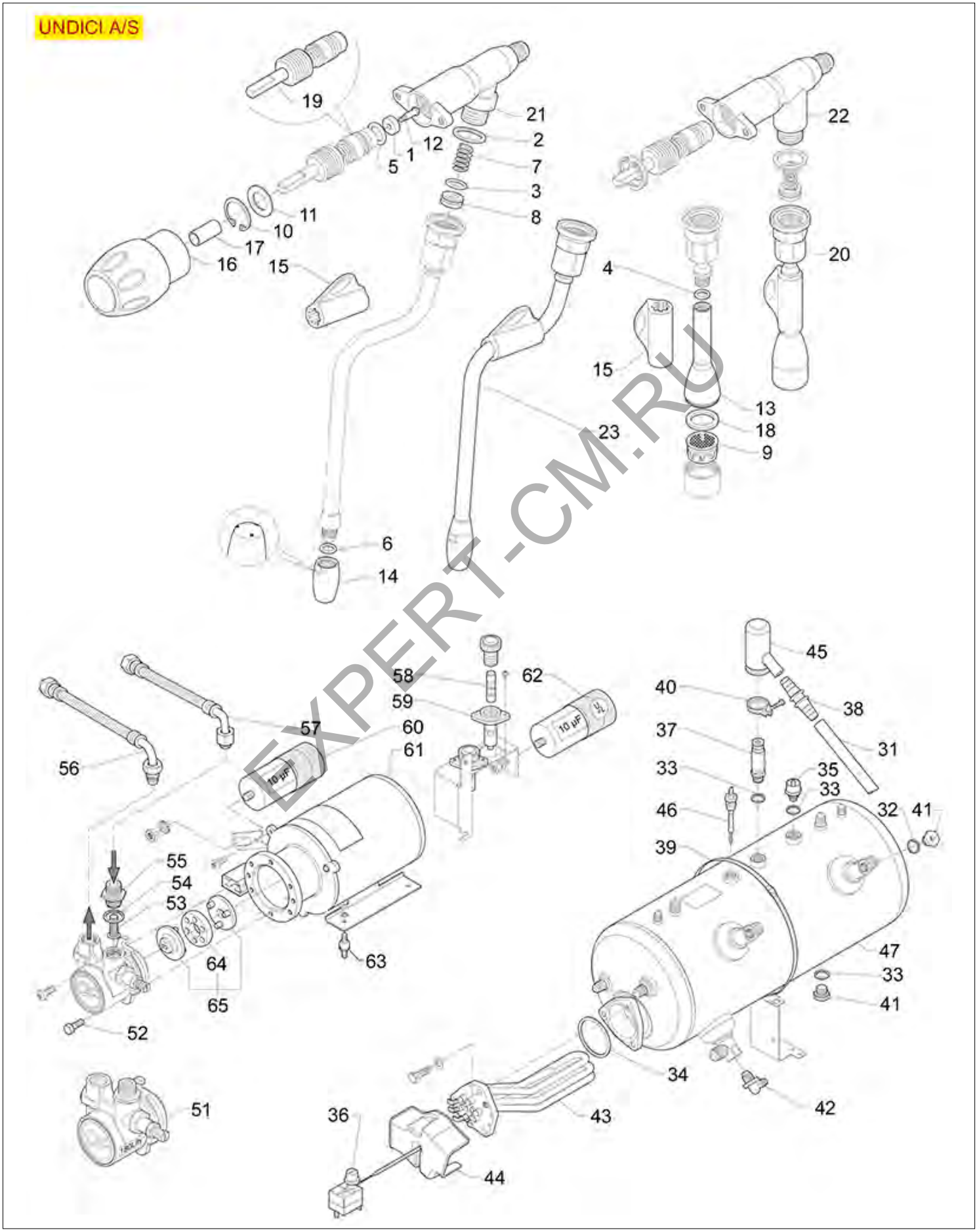

EXPERT-CM.RU

Positions without LF code no.: upon request

CASADIO

Position	LF code no.	Description
1	1186927	FLAT VITON GASKET ø 12x3.5x4 mm
2	1186957	FLAT GASKET PTFE ø 22x17x1,5 mm
3	1186346	O-RING 02043 EPDM
3	1186950	O-RING 02043 GREEN VITON
4	3243009	O-RING 0106 EPDM
5	1186236	O-RING 03043 VITON
6	1186411	O-RING 02031 EPDM
7	1250226	TAP PIPE SPRING ø 11x24 mm
8	1186344	CONICAL PTFE SEAL ø 14.5x7.5x6 mm
9	5029747	WATER SPRINKLER
10	1348029	CIRCLIPS J-22
11	1186299	WASHER ø 21x16x1 mm
12	1184019	SCREW PIN FOR WATER/STEAM TAP
14	1549012	STEAM NOZZLE ST. STEEL ø 1/8"F
15	1549011	BURN PREVENT.RUBBERPIECE f/PIPE ø 10 mm
16	1241220	KNOB WATER/STEAM TAP
18	1186958	FLAT EPDM GASKET ø 20.5x15x2 mm
21	5050244	WATER/STEAM TAP HOUSING
31	1449689	SILICONE HOSE ø 10x13 SHORE 60 - 10 m
32	1186619	COPPER FLAT GASKET ø 18x14x1.5 mm
33	1786166	PTFE FLAT GASKET ø 18x14x1.5 mm
34	1186607	FLAT CARBO GASKET ø 57.8x50x3 mm
34	1186609	PTFE FLAT GASKET ø 58x51x2 mm
35	1523073	EXHAUST VALVE ø 1/4"M S/STEEL
36	5047881	SINGLE-PHASE THERMOSTAT 170°c
37	1515004	BOILER VALVE ø 1/4"M - 2.0 bar CE/PED
38	5072155	HOSE END FITTING STRAIGHT ø 12/16 mm
43	1755236	HEATING ELEMENT 2700W 220V
45	5084070	SAFETY VALVE PROTECTION FOR BOILER
46	1341038	LEVEL PROBE ø 1/4"M-89 mm
51	1330018	ROTARY VANE PUMP CIMBALI/FAEMA ø 3/8"
51	1330218	ROTARY VANE PUMP NUERT ø 3/8" GAS/BSP
53	1160074	WATER FILTER ø 8.5x25 mm
54	1186957	FLAT GASKET PTFE ø 22x17x1,5 mm
55	1349270	PUMP FITTING ø 3/8"M-3/8"M
56	7102087	HOSE FLEX ø 3/8"Fc x 3/8"CMc 380 mm
57	5500682	HOSE FLEX ø 3/8"Fc x 3/8"CFc 2200 mm
60	3068080	CAPACITOR ELECTRICAL 10µF
61	1240295	MOTOR SMA WITH FLANGE 150W UL
61	1240296	MOTOR SMA WITH FLANGE 150W
62	3068080	CAPACITOR ELECTRICAL 10µF
64	1191002	RUBBER COUPLING ø 41.5 mm
65	1191003	COMPLETE METAL COUPLING

EXPRESS-CM.RU

DODICI COFFEE GROUP

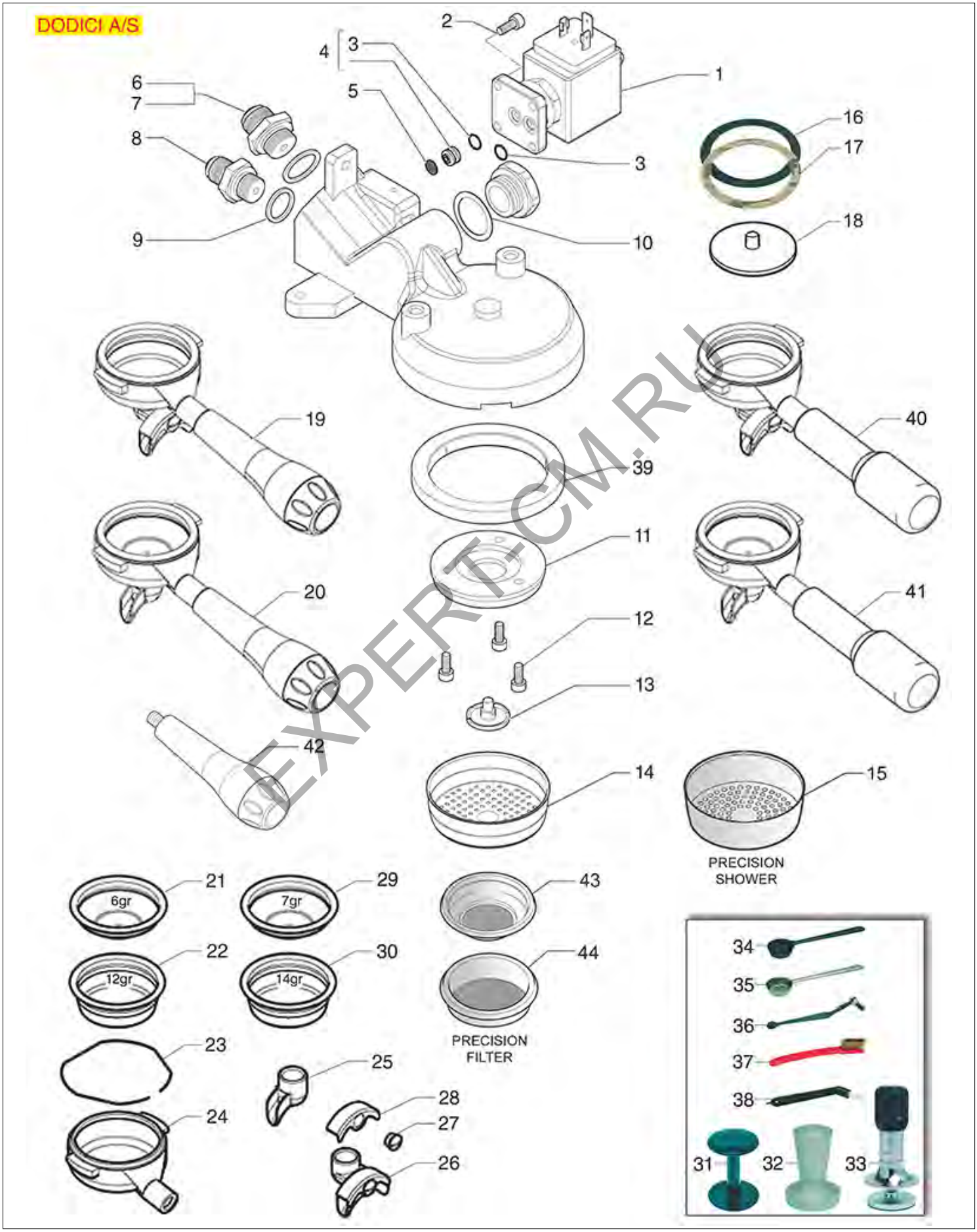

EXPERT-CM.RU

Positions without LF code no.: upon request

CASADIO

Position	LF code no.	Description
1	1120102	3-WAY SOLENOID VALVE LUCIFER 115V 60Hz
1	1120330	3-WAY SOLENOID VALVE LUCIFER 240V 50Hz
2	1455034	CYLINDER HEAD SCREW M4x10
3	1186966	ORM GASKET 0057-19 GREEN VITON
5	1160011	WATER FILTER ø 9 mm
9	1186619	COPPER FLAT GASKET ø 18x14x1.5 mm
10	1186248	PTFE FLAT GASKET ø 27x20x1 mm
11	1086003	SHOWER HOLDER DIFFUSER
12	1455034	CYLINDER HEAD SCREW M4x10
13	1510004	BREW GROUP SPRAY NOZZLE ø 21 mm M5x1
14	1081016	SHOWER SCREEN ø 60 mm
14	1081116	SHOWER SCREEN ø 60 mm
14	1081216	SHOWER SCREEN ø 60 mm
14	1081516	SHOWER ø 60 mm
15	1460201	PRECISION SHOWER SCREEN ø 60 mm
15	1460206	PRECISION SHOWER SCREEN ø 60 mm
16	1190002	RUBBER SHIM ø 73x59x1 mm EPDM
17	1190001	PAPER SHIM ø 73x59x0.8 mm
18	1160293	MEMBRANE BLIND FILTER ø 50 mm
19	1165097	COMPLETE FILTER HOLDER 2 CUPS CASADIO
20	1165096	COMPLETE FILTER HOLDER 1 CUP CASADIO
21	1160251	1 CUP FILTER 6 g ø 70x20.5 mm
22	1160252	FILTER 2-CUP 12 g ø 70x21 mm
23	1250101	FILTER LOCKING SPRING ø 1,00 mm INOX
24	1165142	FILTER HOLDER COFFEE MACH. FAEMA/CIMBALI
25	1022100	SPOUT 1 CUP M16
26	1022101	DOUBLE SPOUT SHORT M16
27	1160559	CHROME PLATED SCREW FOR SPOUT
29	1160335	1 CUP FILTER 7 g ø 70x24,5 mm
30	1160337	FILTER 2-CUP 14 g ø 70x24,5 mm
31	1385000	NYLON TAMPER ø 50/52 mm
31	1385002	NYLON COFFEE TAMPER ø 50/57 mm
32	1385053	ANODIZED ALUMINIUM TAMPER ø 58 mm
32	1385054	ANODIZED ALUMINIUM TAMPER ø 53 mm
33	1385600	DYNAMOMETRIC MANUAL COFFEE TAMPER ø 57mm
33	1385601	DYNAMOMETRIC MANUAL TAMPER ø 52 mm
34	1069001	PLASTIC MEASURING SPOON 20 ml
35	1069002	STAINLESS STEEL MEASURING SPOON 20 ml
36	1384003	SHOWER CLEANING BRUSH BLACK
37	1384002	BRUSH FOR MAINTENANCE
38	1384001	SHOWER CLEANING BRUSH
39	1186721	FILTER HOLDER GASKET ø 74x57.5x8 mm
39	5028118	GASKET FILTER HOLDER ø 74x58x8 mm
40	5074187	FILTERHOLDER COMPLETE 2 CUPS
41	5076313	FILTERHOLDER COMPLETE 1 CUP
42	1141017	FILTER HOLDER HANDLE M10
43	1460100	PRECISION FILTER 1 CUP 6/8 g H24.5
43	1460101	PRECISION FILTER 1 CUP 7/9 g H26.5
44	1460102	PRECISION FILTER 2 CUPS 12/18 g H24.5
44	1460103	PRECISION FILTER 2 CUPS 14/20 g H26.5
44	1460104	PRECISION FILTER 2 CUPS 18/22 g H28.5

EXPERT-CM.RU

DODICI BODIES-HYDRAULIC-ELECTRICAL

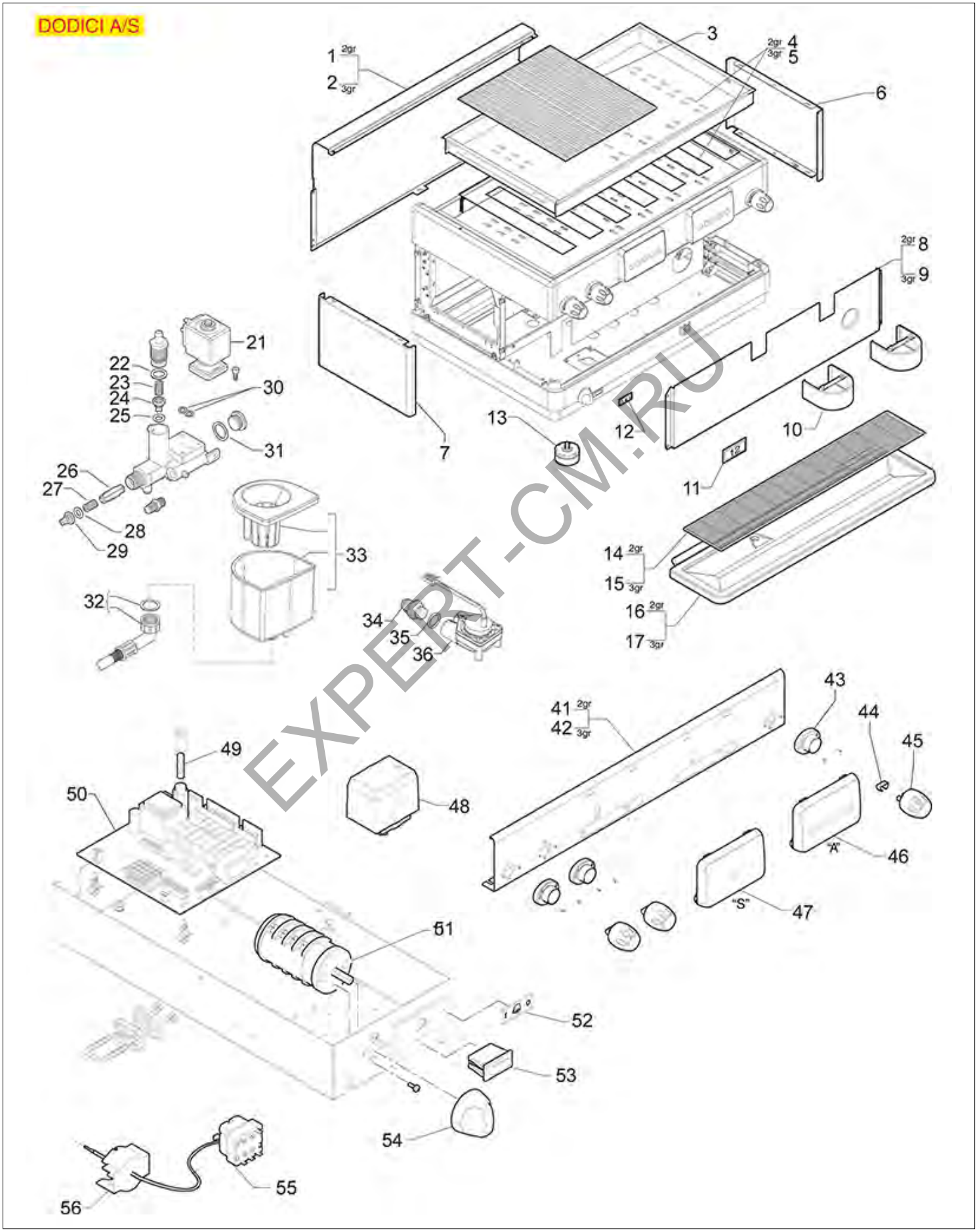

Positions without LF code no.: upon request

CASADIO

Position	LF code no.	Description
3	1185035	CUP WARMING GRID
3	1185702	WHITE CUP WARMING GRID
13	1313016	FOOT ø 60 mm M10 H=30÷40 mm
14	5039437	CUPS SUPPORT GRID OF ST. STEEL 2 GROUPS
21	1120192	2-WAY SOLENOID VALVE ODE 230/240V 8W
22	3060608	O-RING O3050 EPDM
23	5060506	SPRING ø 8.3x21 mm
24	1523066	CHECK VALVE
25	1786197	O-RING 03030 GREEN VITON
28	1786197	O-RING 03030 GREEN VITON
29	1523066	CHECK VALVE
30	1186966	ORM GASKET 0057-19 GREEN VITON
31	1186957	FLAT GASKET PTFE ø 22x17x1,5 mm
32	1449876	DRAIN HOSE ø 3/4"F 1500 mm
33	1527037	DRAIN TANK
35	1186950	O-RING 02043 GREEN VITON
36	1455058	VOLUMETRIC FLOW METER GICAR
36	5053707	VOLUMETRIC FLOW METER GICAR
44	1241561	ELASTIC RING FOR KNOB
45	1241167	WATER/STEAM TAP KNOB
46	1319439	PUSH-BUTTON PANEL 5 BUTTONS
48	1320803	PRESSURE SWITCH P303T02 3-POLES 20A 1/4"
49	3049052	QUICK ACTING FUSE ø 5x20 mm - 10 PCS
50	5050407	ELECTRONIC BOARD CPU UNIFIED
51	1057004	SELECTOR SWITCH 0-2 POSITIONS 20A 600V
54	1241033	SELECTOR SWITCH KNOB ø 40 mm
55	1444509	THREE-PHASE THERMOSTAT 169°C

EXPERT-CM.RU

DODICI WATER/STEAM TAP & BOILER

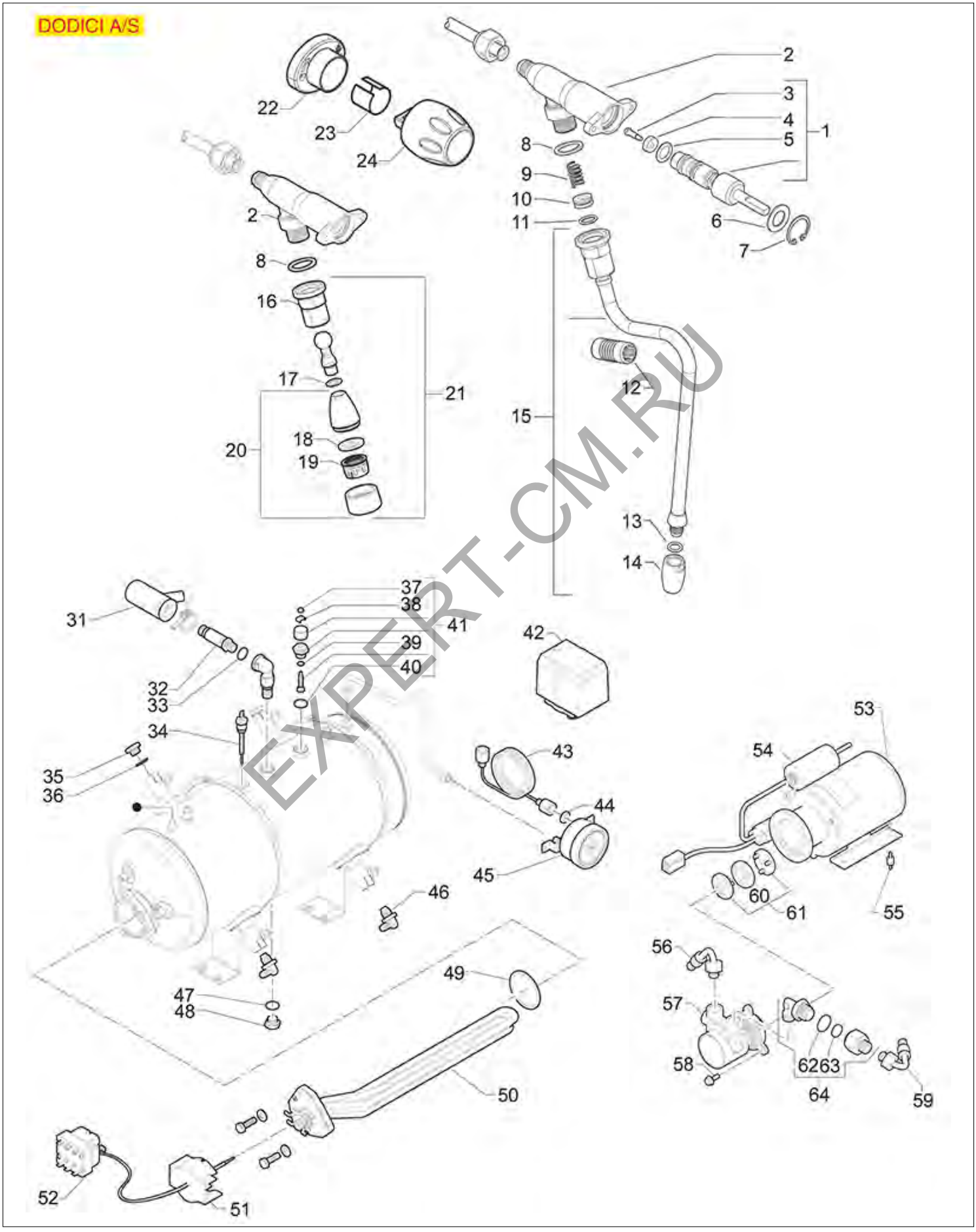

EXPERT-CM.RU

Positions without LF code no.: upon request

CASADIO

Position	LF code no.	Description
1	1348111	TAP SPINDLE
2	5050244	WATER/STEAM TAP HOUSING
3	1184019	SCREW PIN FOR WATER/STEAM TAP
4	1186927	FLAT VITON GASKET ø 12x3.5x4 mm
5	1186236	O-RING 03043 VITON
6	1186299	WASHER ø 21x16x1 mm
7	1348029	CIRCLIPS J-22
8	1186957	FLAT GASKET PTFE ø 22x17x1,5 mm
9	1250226	TAP PIPE SPRING ø 11x24 mm
10	1186344	CONICAL PTFE SEAL ø 14.5x7.5x6 mm
11	1186346	O-RING 02043 EPDM
12	1186924	BURN PREVENTING PIPE HANDGRIP ø 10 mm
13	1186411	O-RING 02031 EPDM
14	1549012	STEAM NOZZLE ST. STEEL ø 1/8"F
15	1449143	S/STEEL COMPLETE STEAM PIPE ø 10 mm
15	1449543	PIPE FOR VAPUR COMPLETE ST.STEEL ø 10 mm
15	1449837	STEAM PIPE
17	3243009	O-RING 0106 EPDM
18	1186958	FLAT EPDM GASKET ø 20.5x15x2 mm
19	5029747	WATER SPRINKLER
20	1449196	NOZZLE FOR WATER OUTLET
21	1449042	COMPLETE WATER PIPE
23	1241561	ELASTIC RING FOR KNOB
24	1241167	WATER/STEAM TAP KNOB
31	5084070	SAFETY VALVE PROTECTION FOR BOILER
32	1515004	BOILER VALVE ø 1/4"M - 2.0 bar CE/PED
33	1786166	PTFE FLAT GASKET ø 18x14x1.5 mm
34	1341038	LEVEL PROBE ø 1/4"M-89 mm
36	1186619	COPPER FLAT GASKET ø 18x14x1.5 mm
37	1348813	HEXAGONAL NUT M4 MEDIUM
39	1186362	O-RING 02021 EPDM
40	1786166	PTFE FLAT GASKET ø 18x14x1.5 mm
41	1523538	BOILER EXHAUST VALVE ø 1/4"M
42	1320803	PRESSURE SWITCH P303T02 3-POLES 20A 1/4"
44	1186974	FLAT PTFE GASKET ø 8.5x4.5x1.5 mm
45	1245047	BOILER-PUMP PRESSURE GAUGE ø 62 mm
45	1245094	PRESSURE GAUGE BOILER-PUMP ø 62 mm
47	1786166	PTFE FLAT GASKET ø 18x14x1.5 mm
49	1186607	FLAT CARBO GASKET ø 57.8x50x3 mm
50	1755235	HEATING ELEMENT 5400/6430W 220/400V
52	1444509	THREE-PHASE THERMOSTAT 169°C
53	1240296	MOTOR SMA WITH FLANGE 150W
54	3068016	CAPACITOR DUCATI ENERGIA 10µF
56	7102087	HOSE FLEX ø 3/8"Fc x 3/8"CMc 380 mm
57	1330017	VOLUMETRIC PUMP PROCON ø 3/8" NPT
58	3528112	HEXAGONAL HEAD SCREW M6x16
59	5500682	HOSE FLEX ø 3/8"Fc x 3/8"CFc 2200 mm
60	1191002	RUBBER COUPLING ø 41.5 mm
61	1191003	COMPLETE METAL COUPLING
62	1186969	FLAT GASKET PTFE ø 25x21x1,5 mm
63	1160068	WATER FILTER ø 26 mm

EXPRESS-OM.RU

QUINDICI COFFEE GROUP

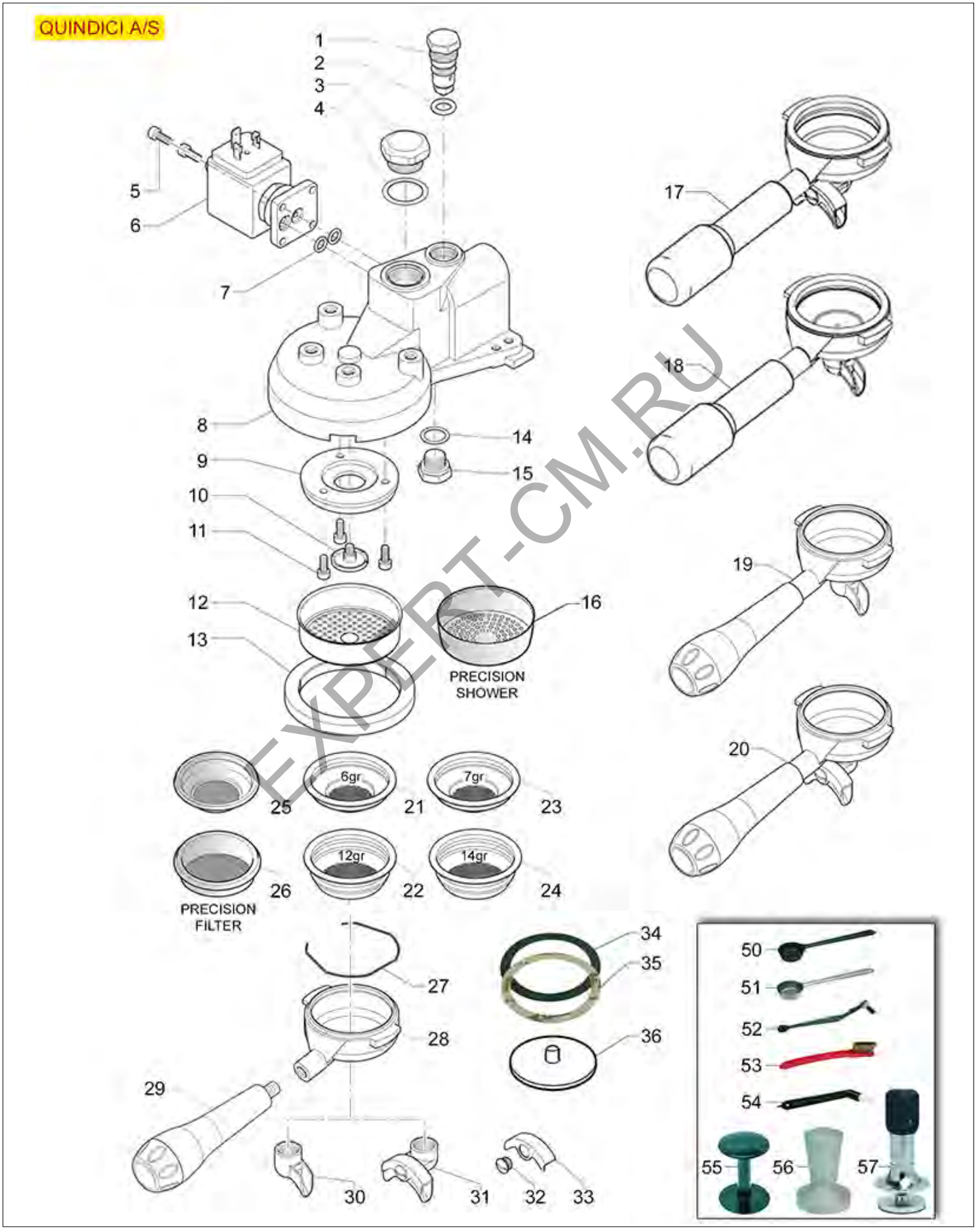

EXPERT-CM.RU

Positions without LF code no.: upon request

CASADIO

Position	LF code no.	Description
1	1501532	PLUG COMPLETE WITH JET
2	1186968	ORM GASKET 0089-27 GREEN VITON
4	1186248	PTFE FLAT GASKET ø 27x20x1 mm
5	1455034	CYLINDER HEAD SCREW M4x10
6	1120102	3-WAY SOLENOID VALVE LUCIFER 115V 60Hz
6	1120268	SOLENOID VALVE ODE 3 WAYS 230V 50/60Hz
6	1120330	3-WAY SOLENOID VALVE LUCIFER 240V 50Hz
7	1186966	ORM GASKET 0057-19 GREEN VITON
9	1086003	SHOWER HOLDER DIFFUSER
10	1510004	BREW GROUP SPRAY NOZZLE ø 21 mm M5x1
11	1455034	CYLINDER HEAD SCREW M4x10
12	1081016	SHOWER SCREEN ø 60 mm
12	1081116	SHOWER SCREEN ø 60 mm
12	1081216	SHOWER SCREEN ø 60 mm
12	1081516	SHOWER ø 60 mm
13	1186721	FILTER HOLDER GASKET ø 74x57.5x8 mm
13	5028118	GASKET FILTER HOLDER ø 74x58x8 mm
14	1186240	PTFE FLAT GASKET ø 17x12x0.5 mm
15	1439024	CAP ø 12 mm FOR BREW GROUP
16	1460201	PRECISION SHOWER SCREEN ø 60 mm
16	1460206	PRECISION SHOWER SCREEN ø 60 mm
17	5074187	FILTERHOLDER COMPLETE 2 CUPS
18	5076313	FILTERHOLDER COMPLETE 1 CUP
19	1165096	COMPLETE FILTER HOLDER 1 CUP CASADIO
20	1165097	COMPLETE FILTER HOLDER 2 CUPS CASADIO
21	1160251	1 CUP FILTER 6 g ø 70x20.5 mm
22	1160252	FILTER 2-CUP 12 g ø 70x21 mm
23	1160335	1 CUP FILTER 7 g ø 70x24,5 mm
24	1160337	FILTER 2-CUP 14 g ø 70x24,5 mm
25	1460100	PRECISION FILTER 1 CUP 6/8 g H24.5
25	1460101	PRECISION FILTER 1 CUP 7/9 g H26.5
26	1460102	PRECISION FILTER 2 CUPS 12/18 g H24.5
26	1460103	PRECISION FILTER 2 CUPS 14/20 g H26.5
26	1460104	PRECISION FILTER 2 CUPS 18/22 g H28.5
27	1250002	S/STEEL FILTER LOCKING SPRING ø 1.20 mm
27	1250101	FILTER LOCKING SPRING ø 1,00 mm INOX
27	1250333	FILTER LOCKING SPRING ø 1.30 mm ST.STEEL
27	1250338	FILTER LOCKING SPRING ø 1.40 mm ST.STEEL
28	1165142	FILTER HOLDER COFFEE MACH. FAEMA/CIMBALI
29	1141017	FILTER HOLDER HANDLE M10
30	1022100	SPOUT 1 CUP M16
31	1022101	DOUBLE SPOUT SHORT M16
32	1160559	CHROME PLATED SCREW FOR SPOUT
34	1190002	RUBBER SHIM ø 73x59x1 mm EPDM
35	1190001	PAPER SHIM ø 73x59x0.8 mm
36	1160293	MEMBRANE BLIND FILTER ø 50 mm
50	1069001	PLASTIC MEASURING SPOON 20 ml
51	1069002	STAINLESS STEEL MEASURING SPOON 20 ml
52	1384003	SHOWER CLEANING BRUSH BLACK
53	1384002	BRUSH FOR MAINTENANCE
54	1384001	SHOWER CLEANING BRUSH
55	1385000	NYLON TAMPER ø 50/52 mm
55	1385002	NYLON COFFEE TAMPER ø 50/57 mm
56	1385053	ANODIZED ALUMINIUM TAMPER ø 58 mm
56	1385054	ANODIZED ALUMINIUM TAMPER ø 53 mm
57	1385600	DYNAMOMETRIC MANUAL COFFEE TAMPER ø 57mm
57	1385601	DYNAMOMETRIC MANUAL TAMPER ø 52 mm

EXPERT-CM.RU

QUINDICI BODIES-HYDRAULIC-ELECTRICAL

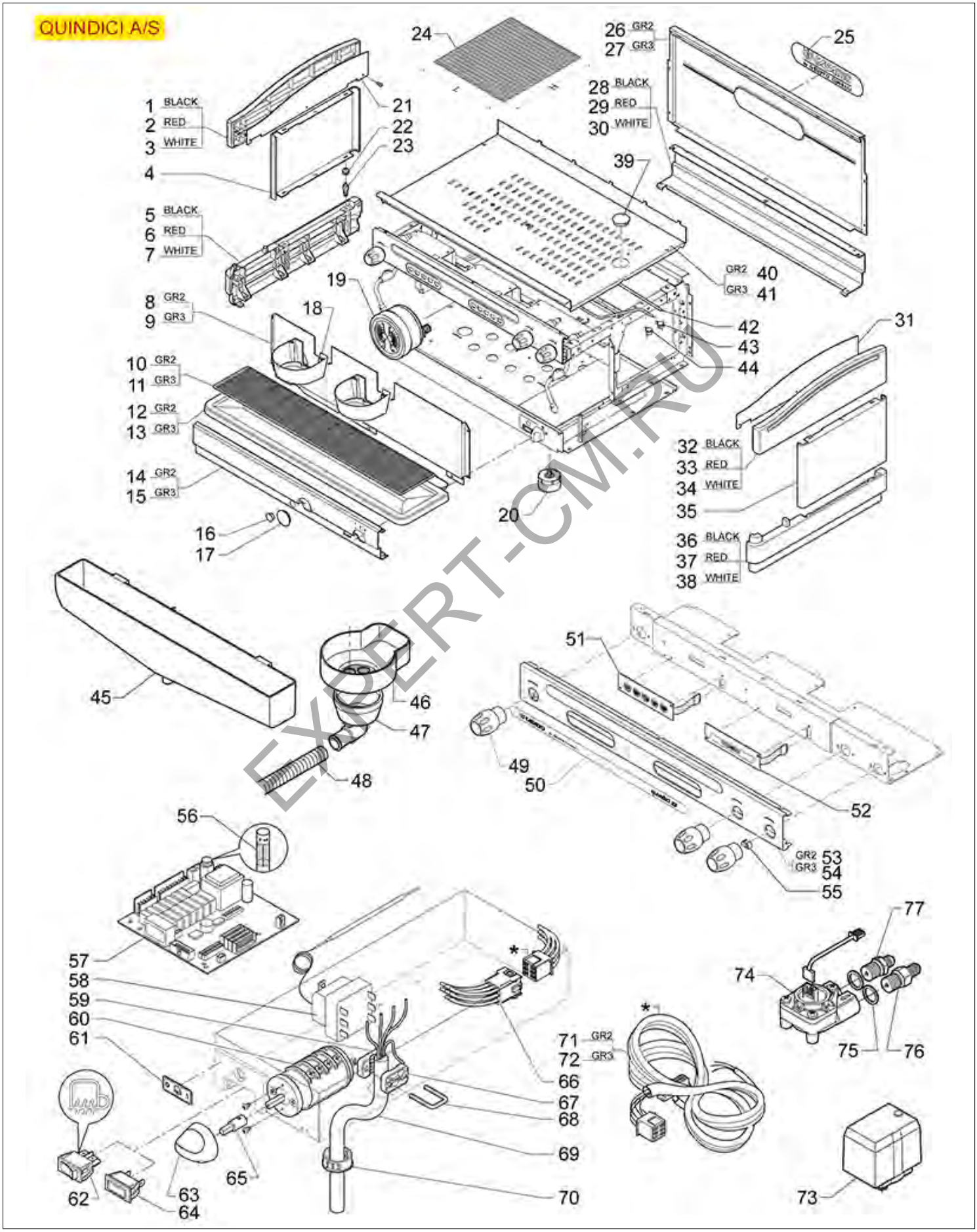

EXPERT-CM.RU

Positions without LF code no.: upon request

CASADIO

Position	LF code no.	Description
10	5039437	CUPS SUPPORT GRID OF ST. STEEL 2 GROUPS
19	1245047	BOILER-PUMP PRESSURE GAUGE ø 62 mm
19	1245094	PRESSURE GAUGE BOILER-PUMP ø 62 mm
20	1313016	FOOT ø 60 mm M10 H=30÷40 mm
24	1185029	CUP WARMING GRID
46	1527005	UPPER PLASTIC DRAIN TANK
47	1527001	TANK COMPLETION
49	1241220	KNOB WATER/STEAM TAP
51	1319697	PUSH-BUTTON PANEL MEMBRANE 5 BUTTONS
52	1319698	PUSH-BUTTON PANEL MEMBRANE 1 BUTTON
55	1241561	ELASTIC RING FOR KNOB
56	3049052	QUICK ACTING FUSE ø 5x20 mm - 10 PCS
57	5050407	ELECTRONIC BOARD CPU UNIFIED
58	1444509	THREE-PHASE THERMOSTAT 169°C
60	1057004	SELECTOR SWITCH 0-2 POSITIONS 20A 600V
63	1241033	SELECTOR SWITCH KNOB ø 40 mm
73	1320803	PRESSURE SWITCH P303T02 3-POLES 20A 1/4"
74	1455058	VOLUMETRIC FLOW METER GICAR
74	5053707	VOLUMETRIC FLOW METER GICAR

EXPERT-CM.RU

QUINDICI WATER/STEAM TAP & BOILER

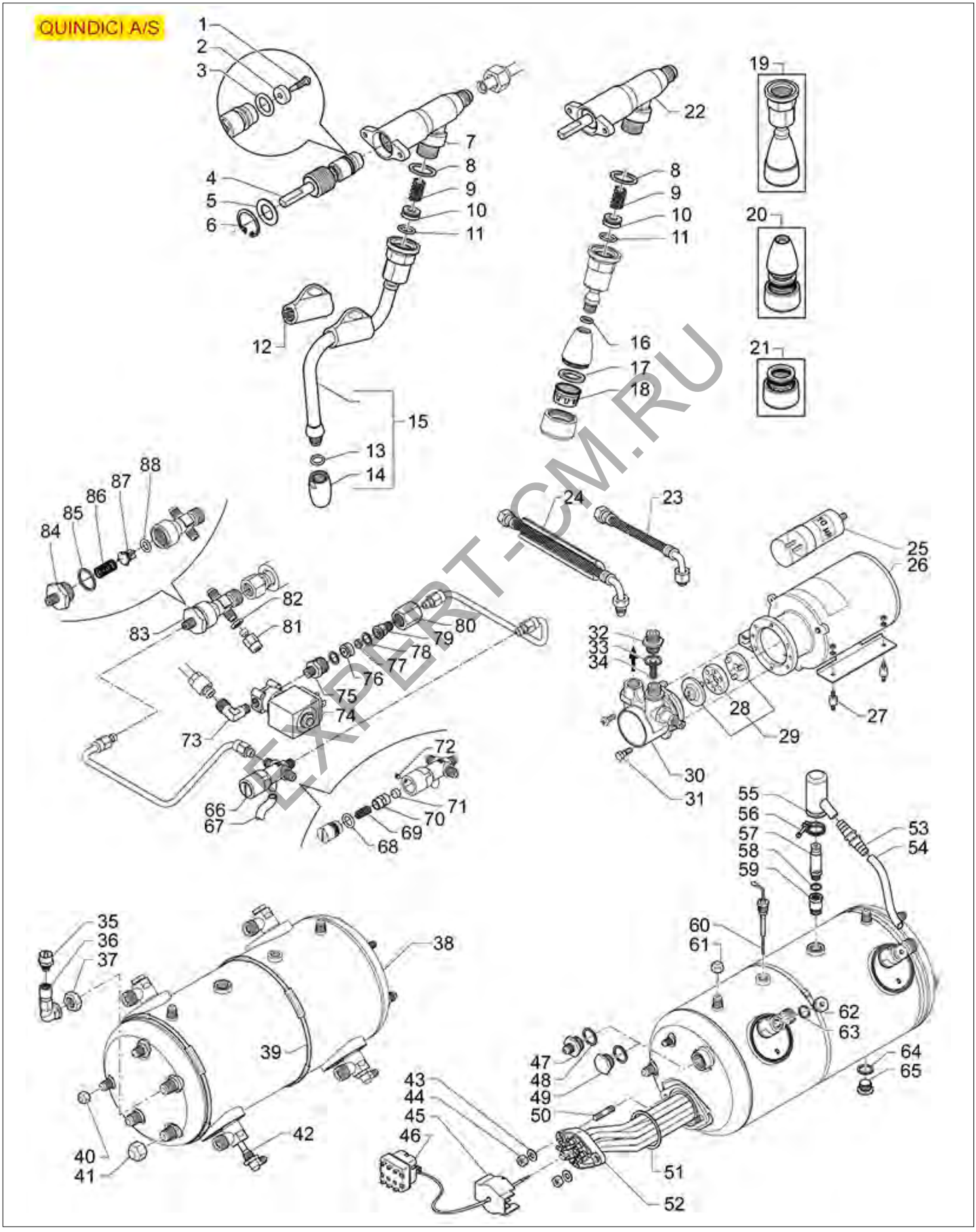

EXPERT-CM.RU

Positions without LF code no.: upon request

CASADIO

Pos.	LF code no.	Description
1	1184019	SCREW PIN FOR WATER/STEAM TAP
2	1186927	FLAT VITON GASKET ø 12x3.5x4 mm
3	1186236	O-RING 03043 VITON
4	1348111	TAP SPINDLE
4	1348317	PIN TAP
5	1186299	WASHER ø 21x16x1 mm
6	1348029	CIRCLIPS J-22
7	5050244	WATER/STEAM TAP HOUSING
8	1186957	FLAT GASKET PTFE ø 22x17x1,5 mm
9	1250226	TAP PIPE SPRING ø 11x24 mm
10	1186344	CONICAL PTFE SEAL ø 14.5x7.5x6 mm
11	1186950	O-RING 02043 GREEN VITON
12	1549011	BURN PREVENT.RUBBERPIECE f/PIPE ø 10 mm
13	1186411	O-RING 02031 EPDM
14	1449166	STEAM NOZZLE ST. STEEL ø 1/8"F
16	3243009	O-RING 0106 EPDM
17	1186958	FLAT EPDM GASKET ø 20.5x15x2 mm
18	5029747	WATER SPRINKLER
19	1449042	COMPLETE WATER PIPE
20	1449196	NOZZLE FOR WATER OUTLET
22	1348316	WATER/STEAM TAP
23	5500682	HOSE FLEX ø 3/8"Fc x 3/8"CFc 2200 mm
24	7102087	HOSE FLEX ø 3/8"Fc x 3/8"CMc 380 mm
25	3068080	CAPACITOR ELECTRICAL 10µF
26	1240296	MOTOR SMA WITH FLANGE 150W
26	1240701	FLANGE MOTOR RPM 150W
28	1191002	RUBBER COUPLING ø 41.5 mm
29	1191003	COMPLETE METAL COUPLING
30	1330018	ROTARY VANE PUMP CIMBALI/FAEMA ø 3/8"
30	1330031	ROTARY VANE PUMP ROTOFLOW ø 3/8" GAS
30	1330033	VOLUMETRIC PUMP PROCON ø 3/8" NPT
30	1330200	ROTARY VANE PUMP NUERT ø 3/8" GAS/BSP
30	1330218	ROTARY VANE PUMP NUERT ø 3/8" GAS/BSP
32	1349270	PUMP FITTING ø 3/8"M-3/8"M
33	1786222	FLAT GASKET EPDM ø 22x18x1.5 mm
34	1160074	WATER FILTER ø 8.5x25 mm
35	1515011	EXHAUST VALVE ø 1/4"M ST.STEEL NSF
35	1523073	EXHAUST VALVE ø 1/4"M S/STEEL
42	1449217	INJECTOR PIPE
44	3528137	HEXAGONAL NUT HIGH M8
46	1444509	THREE-PHASE THERMOSTAT 169°C
48	1186214	COPPER FLAT GASKET ø 26x21.5x1.5 mm
51	1186607	FLAT CARBO GASKET ø 57.8x50x3 mm
51	1186609	PTFE FLAT GASKET ø 58x51x2 mm
52	1755117	HEATING ELEMENT 3780/4500W 230/400V
52	1755119	HEATING ELEMENT 5715W 230/400V
53	5072155	HOSE END FITTING STRAIGHT ø 12/16 mm
54	1449689	SILICONE HOSE ø 10x13 SHORE 60 - 10 m
55	5084070	SAFETY VALVE PROTECTION FOR BOILER
57	1515004	BOILER VALVE ø 1/4"M - 2.0 bar CE/PED
60	1430007	LEVEL PROBE ø 1/4"M-112 mm
63	1186619	COPPER FLAT GASKET ø 18x14x1.5 mm
64	1186957	FLAT GASKET PTFE ø 22x17x1,5 mm
66	1523019	EXPANSION VALVE
67	1449285	SILICONE HOSE ø 6x10 SHORE 60 - 100 m
67	1449685	SILICONE HOSE ø 6x10 SHORE 60 - 5 m
68	1186236	O-RING 03043 VITON
68	1186318	O-RING 03043 EPDM
71	1186363	BLIND GASKET ø 9x5 mm
74	1120460	2-WAY SOLENOID VALVE LUCIFER 240V 50Hz
74	1120466	2-WAY SOLENOID VALVE LUCIFER 115V 60Hz
75	1349110	FITTING ø 1/8"AUSSEN-3/8"AUSSEN
76	1501012	NOZZLE ø 14 HOLE ø 0.8 mm
77	1160511	WATER FILTER ø 9x1.5 mm
78	1186301	COPPER FLAT GASKET ø 14x10x1 mm
85	1186969	FLAT GASKET PTFE ø 25x21x1,5 mm

Pos.	LF code no.	Description
86	1250228	SPRING ø 11,5x24 mm
87	1523049	VALVE FOR NON-RETURN VALVE

EXPERT-CM.RU

VENTI COFFEE GROUP

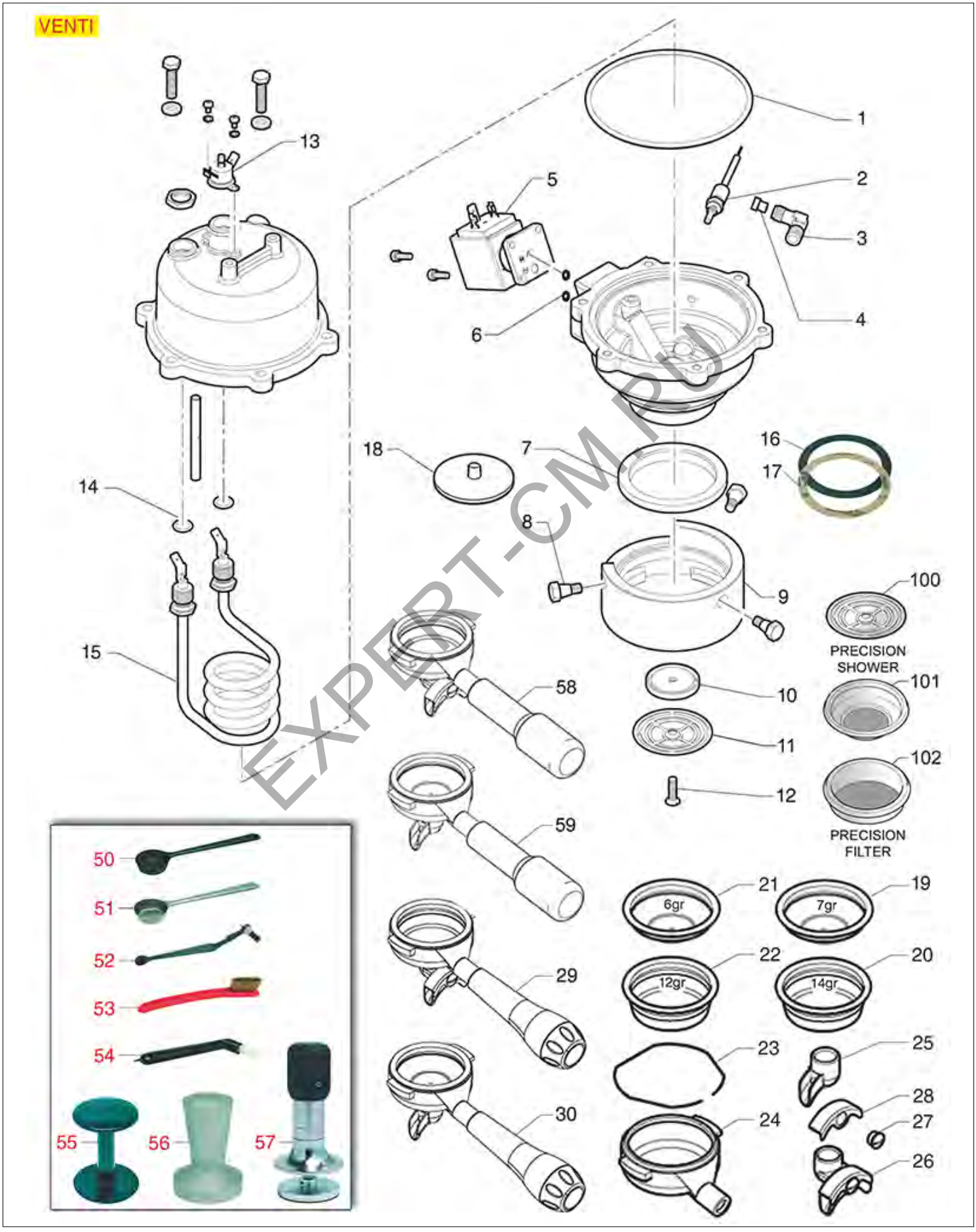

EXPERT-CM.RU

Positions without LF code no.: upon request

CASADIO

Position	LF code no.	Description
1	5501389	O-RING 04400 BLACK VITON
2	1397042	TEMPERATURE PROBE
3	1349013	L-FITTING ø 1/8"M-1/8"M NICKEL-PLATED
6	3243139	O-RING 02025 EPDM
7	1186701	FILTER HOLDER GASKET ø 71x56x9 mm
7	5032979	GASKET FILTER HOLDER ø 71x56x9 mm
8	1184016	SCREW FOR HOPPER M6
10	1081005	BREW GROUP SPRAY NOZZLE ø 35 mm M5x1
11	1081006	SHOWER SCREEN ø 51.5 mm
12	1528011	SHOWER SCREW M5x20
13	1443065	CONTACT THERMOSTAT 160°C 10A 250V
14	1186803	O-RING 02037 EPDM
15	1755237	HEATING ELEMENT 1550/1300W 220/240V
16	1190003	RUBBER SHIM ø 70x57x1 mm EPDM
17	1190005	PAPER SHIM ø 70x57x0.5 mm
17	1190051	PAPER SEAL ø 70x57x0.8 mm
18	1160293	MEMBRANE BLIND FILTER ø 50 mm
19	1160335	1 CUP FILTER 7 g ø 70x24,5 mm
20	1160337	FILTER 2-CUP 14 g ø 70x24,5 mm
21	1160251	1 CUP FILTER 6 g ø 70x20.5 mm
22	1160252	FILTER 2-CUP 12 g ø 70x21 mm
23	1250101	FILTER LOCKING SPRING ø 1,00 mm INOX
24	1165142	FILTER HOLDER COFFEE MACH. FAEMA/CIMBALI
25	1022100	SPOUT 1 CUP M16
26	1022101	DOUBLE SPOUT SHORT M16
27	1160559	CHROME PLATED SCREW FOR SPOUT
29	1165097	COMPLETE FILTER HOLDER 2 CUPS CASADIO
30	1165096	COMPLETE FILTER HOLDER 1 CUP CASADIO
50	1069001	PLASTIC MEASURING SPOON 20 ml
51	1069002	STAINLESS STEEL MEASURING SPOON 20 ml
52	1384003	SHOWER CLEANING BRUSH BLACK
53	1384002	BRUSH FOR MAINTENANCE
54	1384001	SHOWER CLEANING BRUSH
55	1385000	NYLON TAMPER ø 50/52 mm
55	1385002	NYLON COFFEE TAMPER ø 50/57 mm
56	1385053	ANODIZED ALUMINIUM TAMPER ø 58 mm
56	1385054	ANODIZED ALUMINIUM TAMPER ø 53 mm
57	1385600	DYNAMOMETRIC MANUAL COFFEE TAMPER ø 57mm
57	1385601	DYNAMOMETRIC MANUAL TAMPER ø 52 mm
58	5074187	FILTERHOLDER COMPLETE 2 CUPS
59	5076313	FILTERHOLDER COMPLETE 1 CUP
100	1460200	PRECISION SHOWER SCREEN ø 51.5 mm
100	1460205	PRECISION SHOWER SCREEN ø 51.5 mm
101	1460100	PRECISION FILTER 1 CUP 6/8 g H24.5
101	1460101	PRECISION FILTER 1 CUP 7/9 g H26.5
102	1460102	PRECISION FILTER 2 CUPS 12/18 g H24.5
102	1460103	PRECISION FILTER 2 CUPS 14/20 g H26.5
102	1460104	PRECISION FILTER 2 CUPS 18/22 g H28.5

EXPRESS-ICM.RU

VENTI BODIE-HYDRAULIC-ELECTRICAL

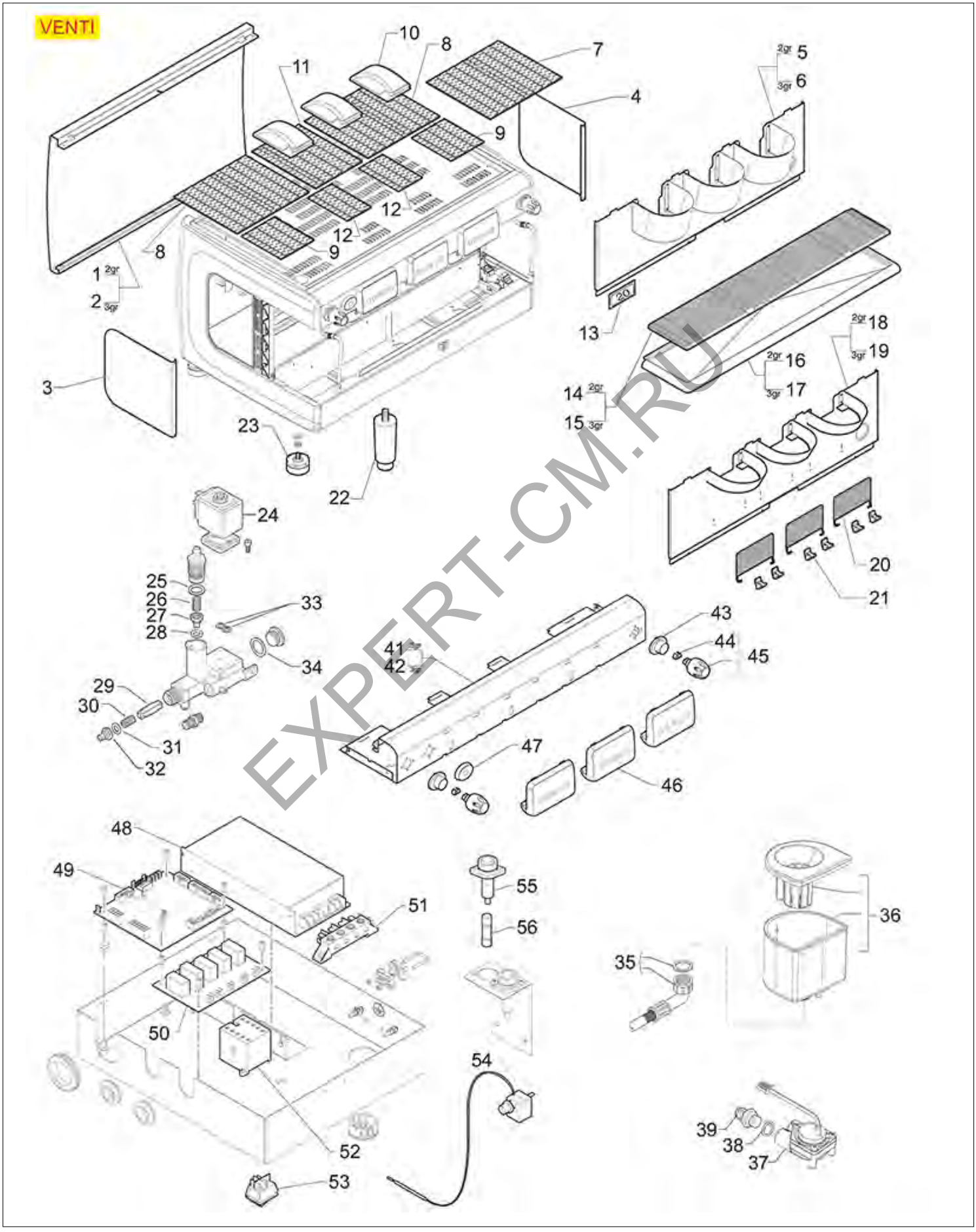

EXPERT-CM.RU

Positions without LF code no.: upon request

Position	LF code no.	Description
7	1185029	CUP WARMING GRID
23	1313016	FOOT ø 60 mm M10 H=30÷40 mm
24	5501168	SOLENOID VALVE ODE 2 WAY 24VDC
25	3060608	O-RING O3050 EPDM
26	5060506	SPRING ø 8.3x21 mm
27	1523066	CHECK VALVE
28	1786197	O-RING 03030 GREEN VITON
31	1786197	O-RING 03030 GREEN VITON
32	1523066	CHECK VALVE
33	1186966	ORM GASKET 0057-19 GREEN VITON
34	1186957	FLAT GASKET PTFE ø 22x17x1,5 mm
35	1449876	DRAIN HOSE ø 3/4"F 1500 mm
36	1527037	DRAIN TANK
37	1455058	VOLUMETRIC FLOW METER GICAR
37	5053707	VOLUMETRIC FLOW METER GICAR
38	1186950	O-RING 02043 GREEN VITON
44	1241561	ELASTIC RING FOR KNOB
45	1241167	WATER/STEAM TAP KNOB
46	1319438	PUSH-BUTTON PANEL 7 BUTTONS
51	3247037	TERMINAL BLOCK 4-POLES FV173 40A 600V
52	1454001	CONTACTOR ALLEN-BRADLEY K09 20A 400V
53	1319202	BIPOLAR SWITCH GREEN 16A 250V
54	5047881	SINGLE-PHASE THERMOSTAT 170°c

EXPERT-CM.RU

VENTI WATER/STEAM TAP & BOILER

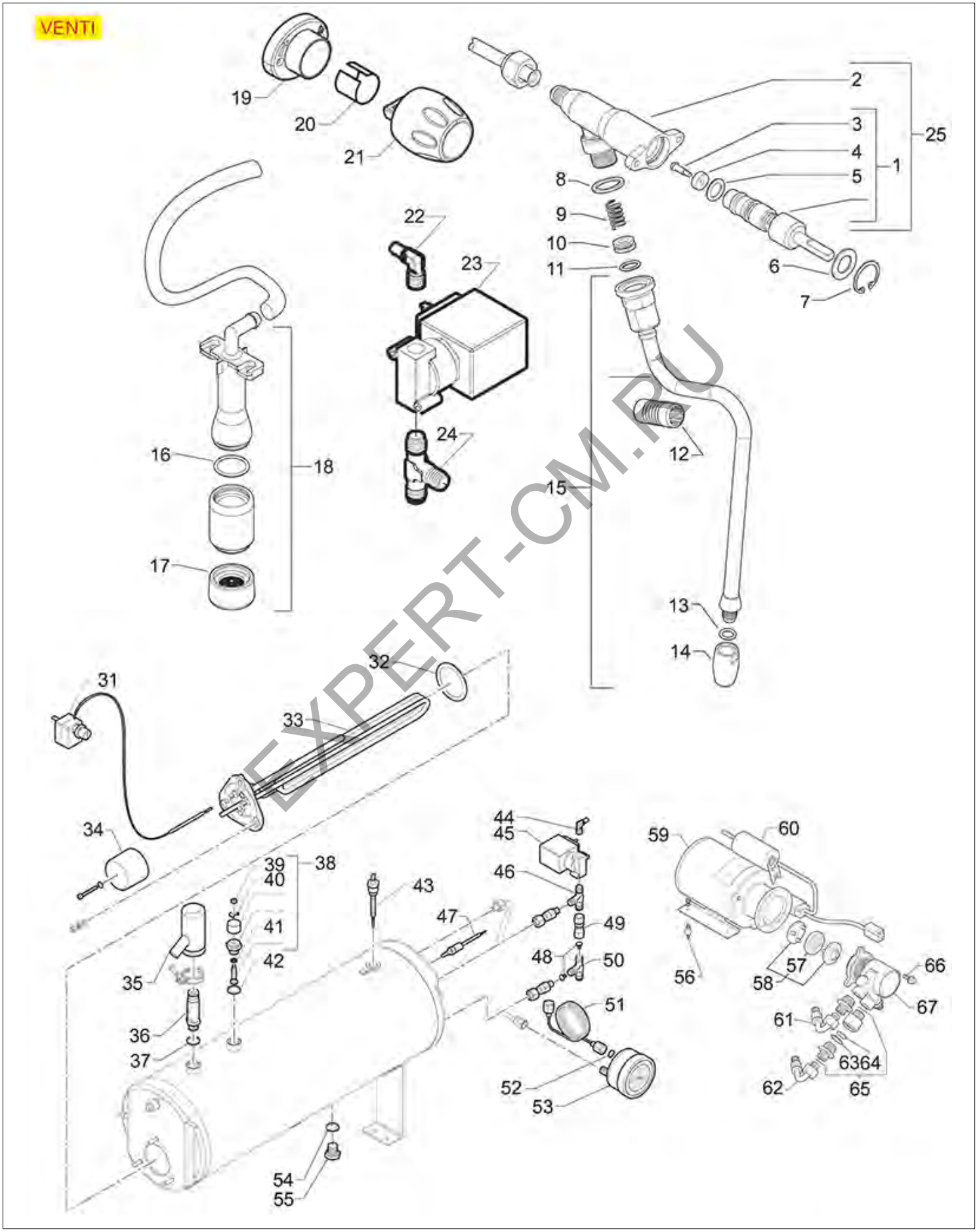

EXPERT-CM.RU

Positions without LF code no.: upon request

CASADIO

Position	LF code no.	Description
1	1348111	TAP SPINDLE
2	5050244	WATER/STEAM TAP HOUSING
3	1184019	SCREW PIN FOR WATER/STEAM TAP
4	1186927	FLAT VITON GASKET ø 12x3.5x4 mm
5	1186236	O-RING 03043 VITON
6	1186299	WASHER ø 21x16x1 mm
7	1348029	CIRCLIPS J-22
8	1186957	FLAT GASKET PTFE ø 22x17x1,5 mm
9	1250226	TAP PIPE SPRING ø 11x24 mm
10	1186344	CONICAL PTFE SEAL ø 14.5x7.5x6 mm
11	1186346	O-RING 02043 EPDM
12	1186924	BURN PREVENTING PIPE HANDGRIP ø 10 mm
13	1186411	O-RING 02031 EPDM
14	1549012	STEAM NOZZLE ST. STEEL ø 1/8"F
15	1549005	ST.STEEL COMPLETE STEAM PIPE ø 10 mm
16	1786165	O-RING 02068 GREEN VITON
18	1449209	COMPLETE WATER PIPE
20	1241561	ELASTIC RING FOR KNOB
21	1241167	WATER/STEAM TAP KNOB
22	1349654	ELBOW HOSE-END FITTING ø 1/8" M6
23	1120106	SOLENOID VALVE ODE 2 WAY ø 1/8" 24VDC
24	3349356	NICHEL-PL.T-FITTING ø 1/8"M-1/8"M-1/8"M
31	5047881	SINGLE-PHASE THERMOSTAT 170°c
32	3186013	O-RING 06187 EPDM ø 58 mm
33	1755234	HEATING ELEMENT 2700W 230V
35	5084070	SAFETY VALVE PROTECTION FOR BOILER
36	1515004	BOILER VALVE ø 1/4"M - 2.0 bar CE/PED
37	1786166	PTFE FLAT GASKET ø 18x14x1.5 mm
38	1523538	BOILER EXHAUST VALVE ø 1/4"M
39	1348813	HEXAGONAL NUT M4 MEDIUM
41	1186362	O-RING 02021 EPDM
42	1786166	PTFE FLAT GASKET ø 18x14x1.5 mm
43	1341038	LEVEL PROBE ø 1/4"M-89 mm
44	1349654	ELBOW HOSE-END FITTING ø 1/8" M6
45	1120106	SOLENOID VALVE ODE 2 WAY ø 1/8" 24VDC
46	1349153	T-FITTING ø 1/4"M-1/4"M-1/4"M
47	1397042	TEMPERATURE PROBE
50	3349356	NICHEL-PL.T-FITTING ø 1/8"M-1/8"M-1/8"M
52	1186974	FLAT PTFE GASKET ø 8.5x4.5x1.5 mm
53	1245047	BOILER-PUMP PRESSURE GAUGE ø 62 mm
54	1786166	PTFE FLAT GASKET ø 18x14x1.5 mm
57	1191002	RUBBER COUPLING ø 41.5 mm
58	1191003	COMPLETE METAL COUPLING
59	1240296	MOTOR SMA WITH FLANGE 150W
59	1240701	FLANGE MOTOR RPM 150W
60	3068080	CAPACITOR ELECTRICAL 10µF
61	7102087	HOSE FLEX ø 3/8"Fc x 3/8"CMc 380 mm
62	5500682	HOSE FLEX ø 3/8"Fc x 3/8"CFc 2200 mm
63	1186969	FLAT GASKET PTFE ø 25x21x1,5 mm
64	1160068	WATER FILTER ø 26 mm
65	1160700	COUPLING WITH FILTER ø 3/8"M - 3/8"M
66	3528112	HEXAGONAL HEAD SCREW M6x16
67	1330017	VOLUMETRIC PUMP PROCON ø 3/8" NPT

EXPRESS-CM.RU

DAFNE COFFEE GROUP

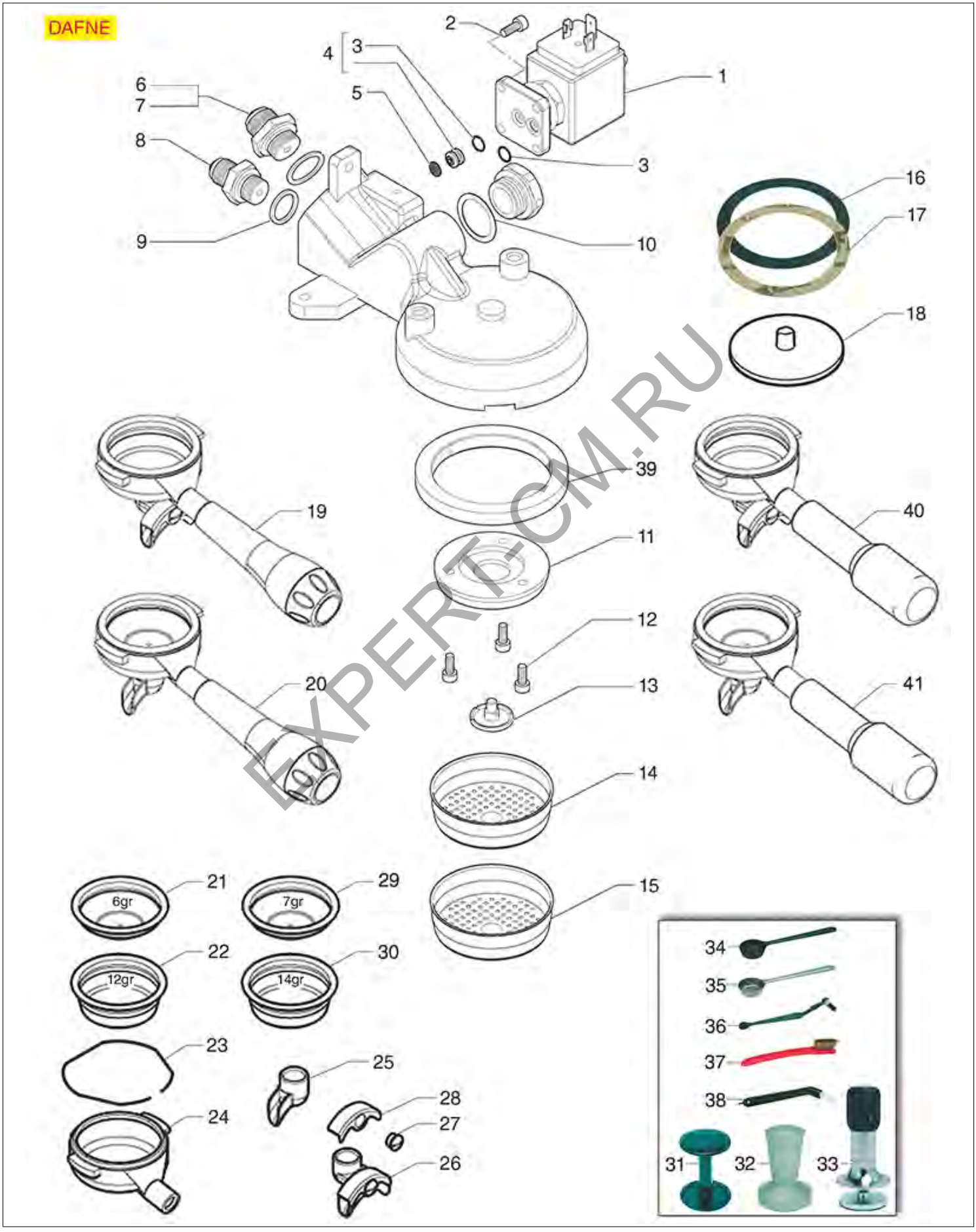

EXPERT-CM.RU

Positions without LF code no.: upon request

CASADIO

Position	LF code no.	Description
1	1120102	3-WAY SOLENOID VALVE LUCIFER 115V 60Hz
1	1120268	SOLENOID VALVE ODE 3 WAYS 230V 50/60Hz
1	1120330	3-WAY SOLENOID VALVE LUCIFER 240V 50Hz
2	1455034	CYLINDER HEAD SCREW M4x10
3	1186966	ORM GASKET 0057-19 GREEN VITON
5	1160011	WATER FILTER ø 9 mm
9	1186619	COPPER FLAT GASKET ø 18x14x1.5 mm
10	1186248	PTFE FLAT GASKET ø 27x20x1 mm
11	1086003	SHOWER HOLDER DIFFUSER
12	1455034	CYLINDER HEAD SCREW M4x10
13	1510004	BREW GROUP SPRAY NOZZLE ø 21 mm M5x1
14	1081016	SHOWER SCREEN ø 60 mm
15	1081116	SHOWER SCREEN ø 60 mm
15	1081216	SHOWER SCREEN ø 60 mm
15	1081516	SHOWER ø 60 mm
16	1190002	RUBBER SHIM ø 73x59x1 mm EPDM
17	1190001	PAPER SHIM ø 73x59x0.8 mm
18	1160293	MEMBRANE BLIND FILTER ø 50 mm
19	1165097	COMPLETE FILTER HOLDER 2 CUPS CASADIO
20	1165096	COMPLETE FILTER HOLDER 1 CUP CASADIO
21	1160251	1 CUP FILTER 6 g ø 70x20.5 mm
22	1160252	FILTER 2-CUP 12 g ø 70x21 mm
23	1250101	FILTER LOCKING SPRING ø 1,00 mm INOX
24	1165142	FILTER HOLDER COFFEE MACH. FAEMA/CIMBALI
25	1022100	SPOUT 1 CUP M16
26	1022101	DOUBLE SPOUT SHORT M16
27	1160559	CHROME PLATED SCREW FOR SPOUT
29	1160335	1 CUP FILTER 7 g ø 70x24,5 mm
30	1160337	FILTER 2-CUP 14 g ø 70x24,5 mm
31	1385000	NYLON TAMPER ø 50/52 mm
31	1385002	NYLON COFFEE TAMPER ø 50/57 mm
32	1385053	ANODIZED ALUMINIUM TAMPER ø 58 mm
32	1385054	ANODIZED ALUMINIUM TAMPER ø 53 mm
33	1385600	DYNAMOMETRIC MANUAL COFFEE TAMPER ø 57mm
33	1385601	DYNAMOMETRIC MANUAL TAMPER ø 52 mm
34	1069001	PLASTIC MEASURING SPOON 20 ml
35	1069002	STAINLESS STEEL MEASURING SPOON 20 ml
36	1384003	SHOWER CLEANING BRUSH BLACK
37	1384002	BRUSH FOR MAINTENANCE
38	1384001	SHOWER CLEANING BRUSH
39	1186721	FILTER HOLDER GASKET ø 74x57.5x8 mm
39	5028118	GASKET FILTER HOLDER ø 74x58x8 mm
40	5074187	FILTERHOLDER COMPLETE 2 CUPS
41	5076313	FILTERHOLDER COMPLETE 1 CUP

EXPRESS-CM.RU

DAFNE BOILER AND MOTOR

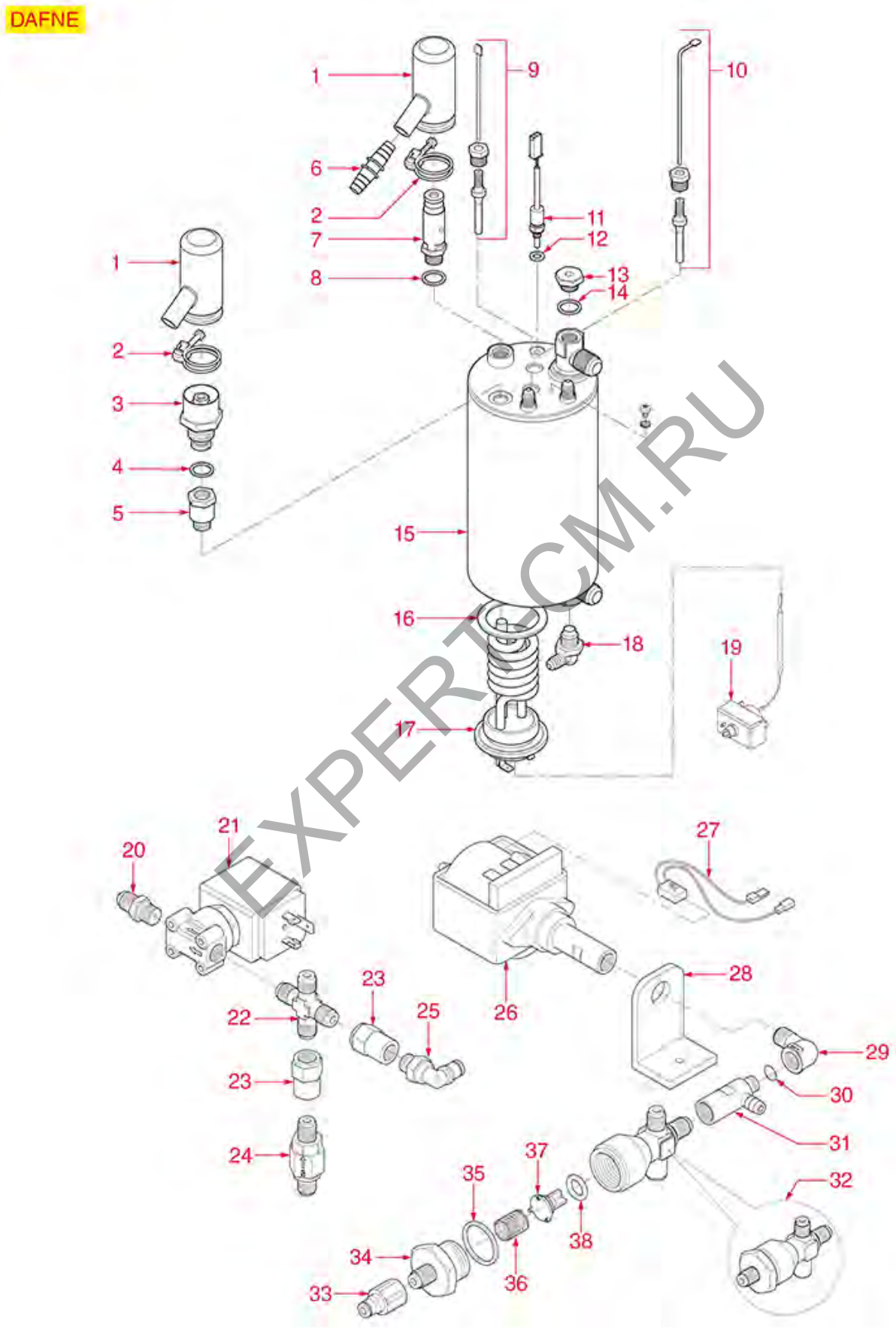

EXPERT-CM.RU

Positions without LF code no.: upon request

CASADIO

Position	LF code no.	Description
1	5084070	SAFETY VALVE PROTECTION FOR BOILER
3	1523073	EXHAUST VALVE ø 1/4"M S/STEEL
3	1523537	EXHAUST VALVE ø 1/4"M
4	1186619	COPPER FLAT GASKET ø 18x14x1.5 mm
6	5072155	HOSE END FITTING STRAIGHT ø 12/16 mm
7	1515004	BOILER VALVE ø 1/4"M - 2.0 bar CE/PED
8	1186619	COPPER FLAT GASKET ø 18x14x1.5 mm
9	1341038	LEVEL PROBE ø 1/4"M-89 mm
12	5027726	FLAT GASKET PTFE ø 11x6.5x1.5 mm
14	1186619	COPPER FLAT GASKET ø 18x14x1.5 mm
16	1186623	PTFE FLAT GASKET ø 53x43x3 mm
17	1755301	HEATING ELEMENT 1400W 230V
21	1120460	2-WAY SOLENOID VALVE LUCIFER 240V 50Hz
21	1120466	2-WAY SOLENOID VALVE LUCIFER 115V 60Hz
24	1523067	EXPANSION VALVE ø 1/8"M-1/8"M
26	1122601	VIBRATORY PUMP EX5 41W 120V 60Hz
26	1331006	VIBRATORY PUMP EX5GW 48W 230V 50Hz
28	1331023	SQUARE VIBRATION DAMPER EX-EP-EK-EA
30	3243009	O-RING 0106 EPDM
32	1523015	NON-RETURN VALVE
35	1186969	FLAT GASKET PTFE ø 25x21x1,5 mm
36	1250228	SPRING ø 11,5x24 mm
37	1523049	VALVE FOR NON-RETURN VALVE
38	1186255	O-RING 0109 EPDM

EXPERT-CM.RU